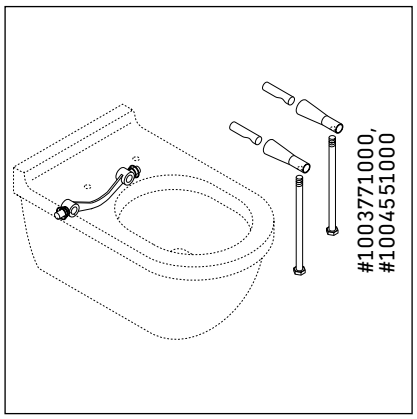
#1003771000,
#1004551000

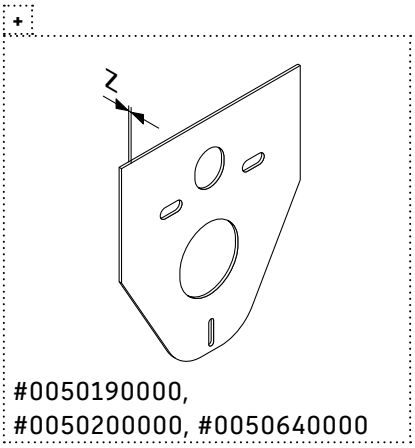
Z
#0050190000,
#0050200000, #0050640000

1

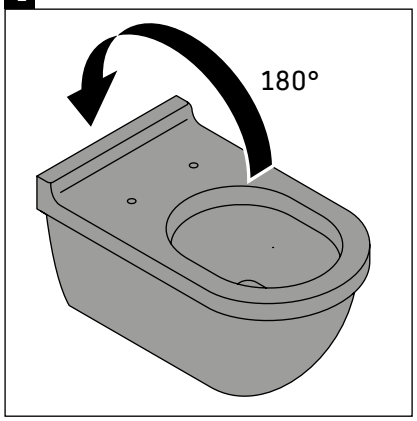
180°

2

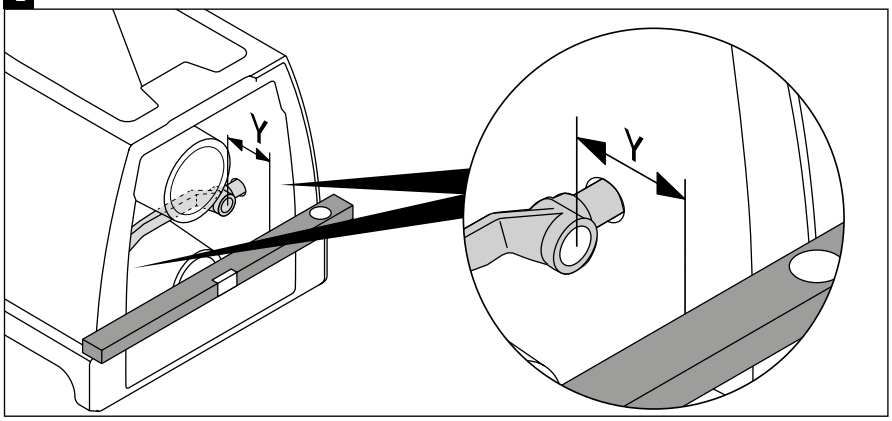
Y
Y

3

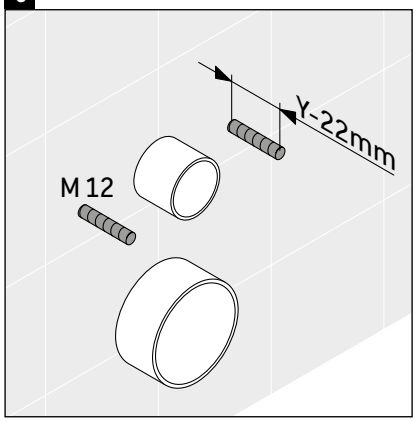
Y-22mm
M 12

4

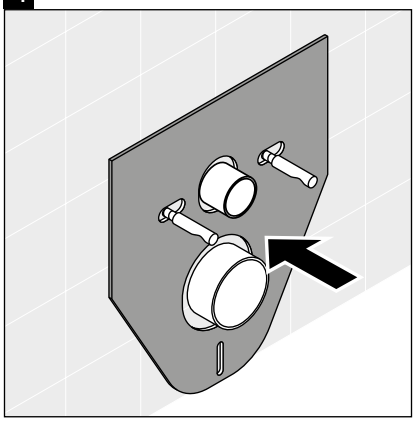

5

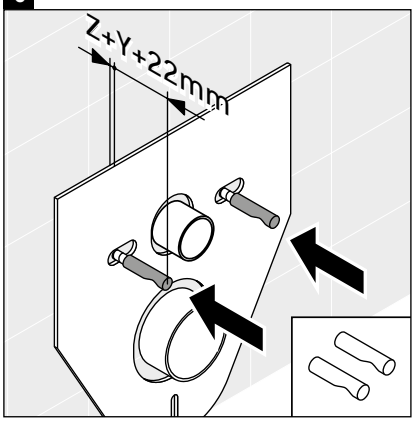
Z+Y+22mm

6

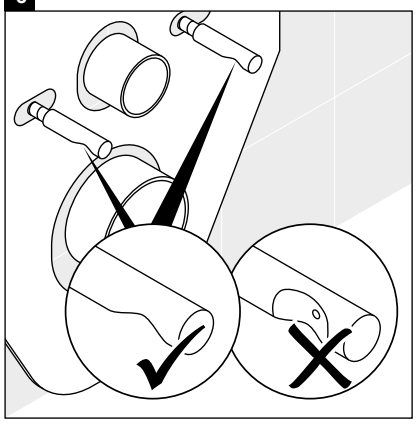

7

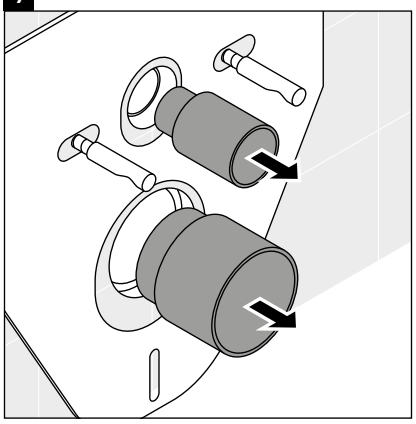

8

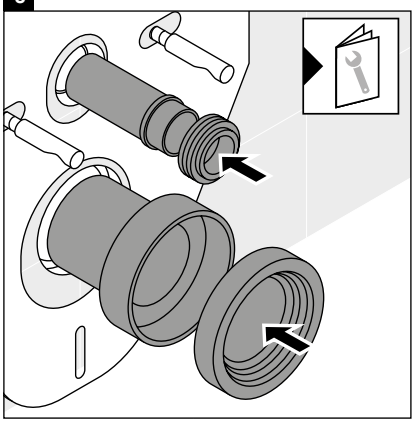

9

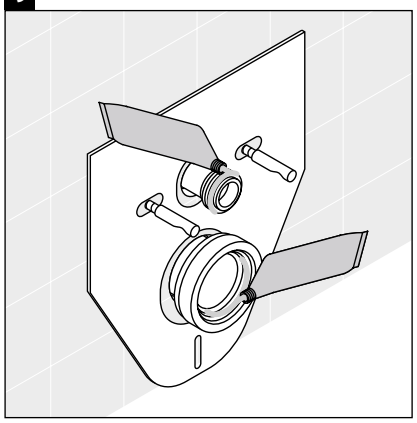

10

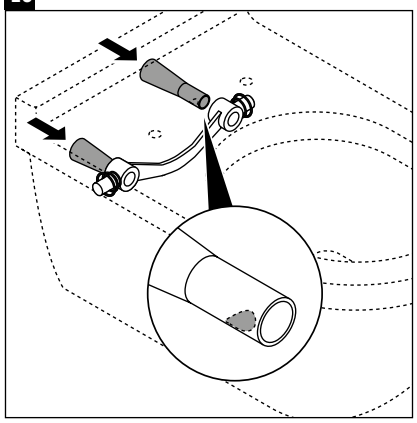

11

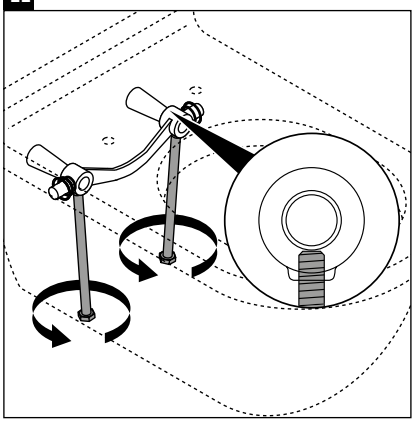

12

13

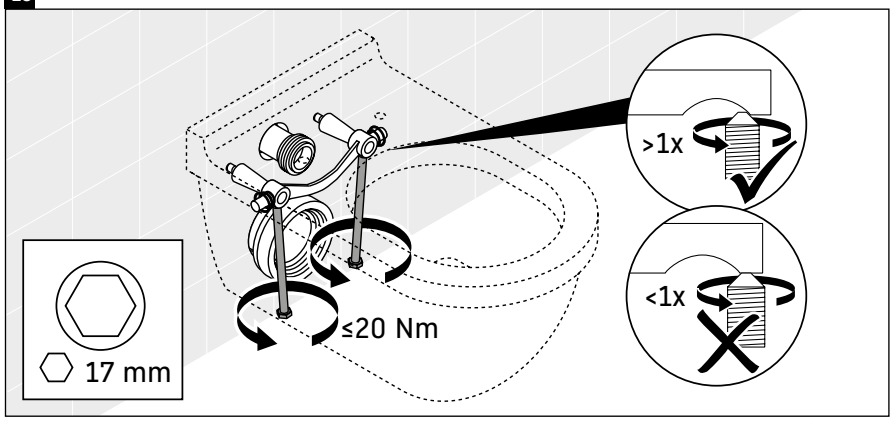

14

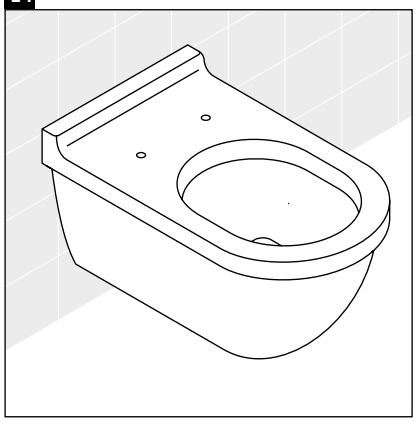

56767
Best.-Nr. 70000133/21.05.16 We reserve the right to make technical improvements and enhance the appearance of the products shown.

DURAVIT AG, Werderstr. 36, 78132 Hornberg, Germany, Phone +49 78 33 700, Fax +49 78 33 70 289, info@duravit.de, www.duravit.de