Freestanding Thermostatic Bath Shower Mixer

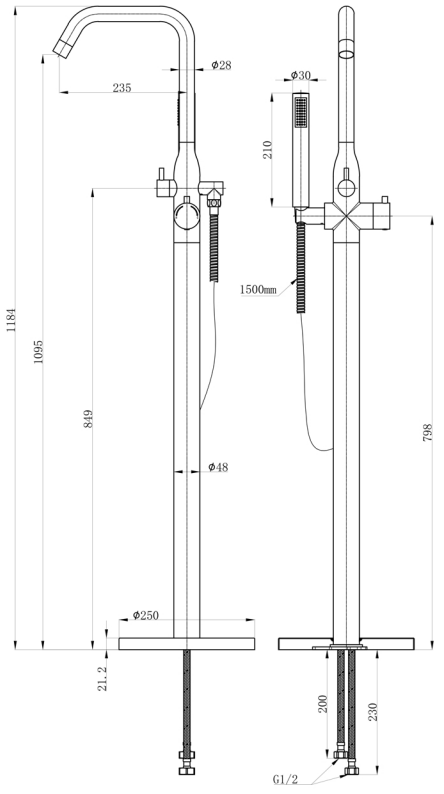

Fitting Instructions
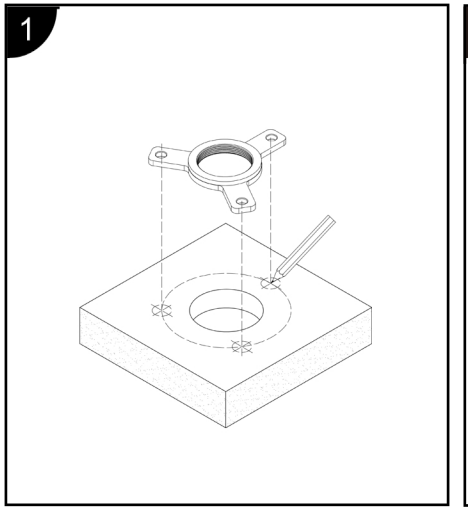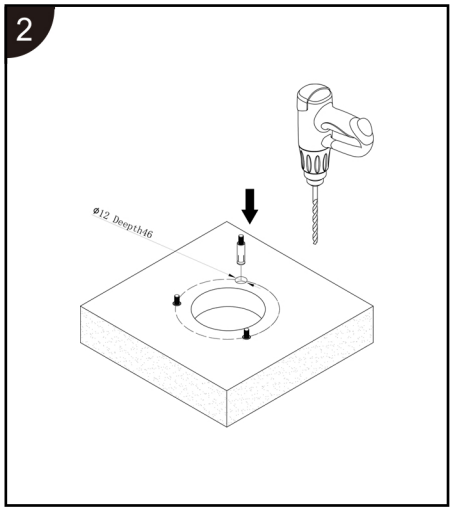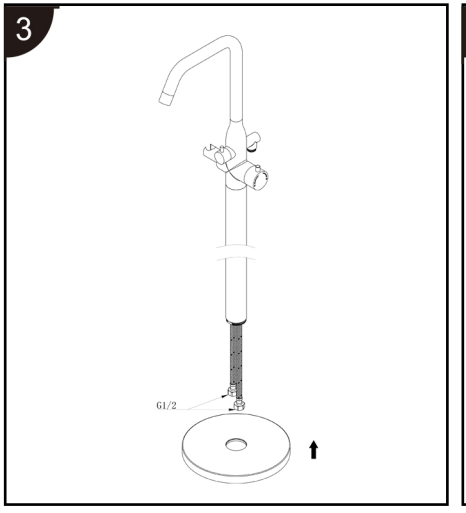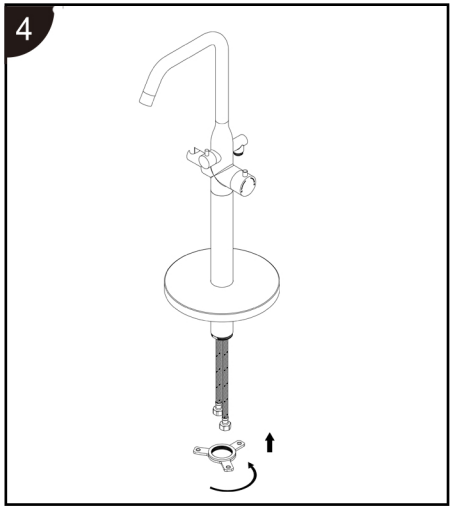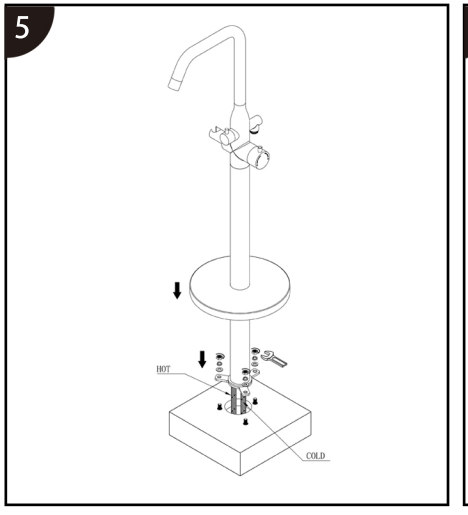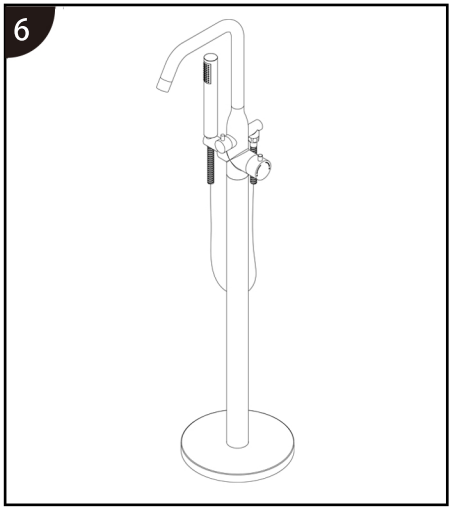
Please follow them carefully and leave this manual with end user