AQUAECO

WASHROOM AND PLUMBING SOLUTIONS

Installation Guide

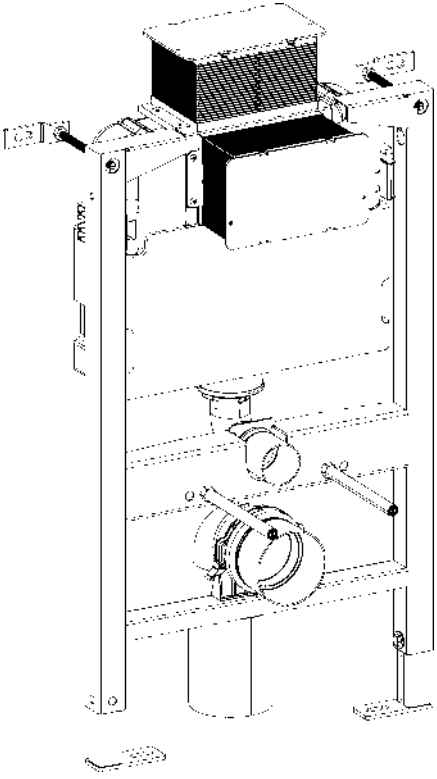

AQP-K210-A01-ESG1

UNIVERSAL FRAMED 820 CONCEALED CISTERN FOR WALL HUNG WC

A member of SANIPEXGROUP

www.sanipexgroup.com

1

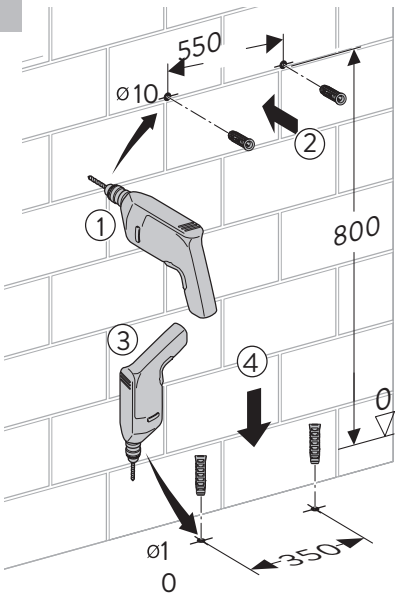

2

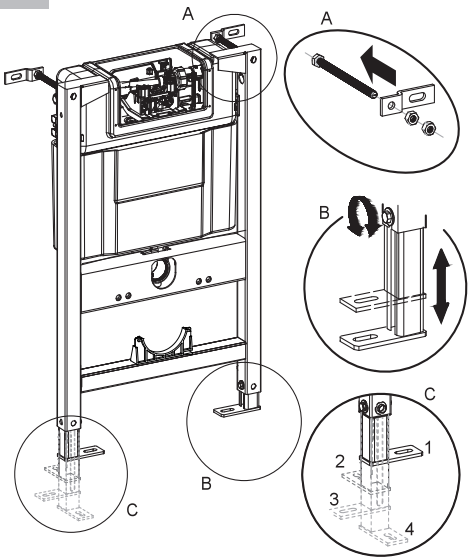

3

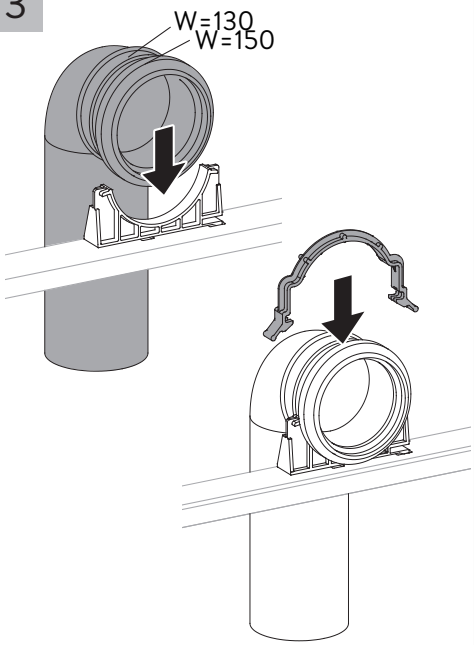

4

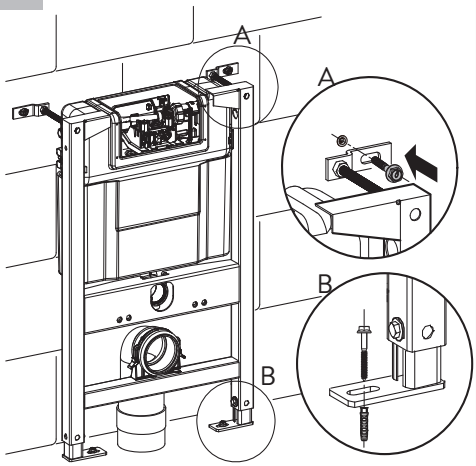

5

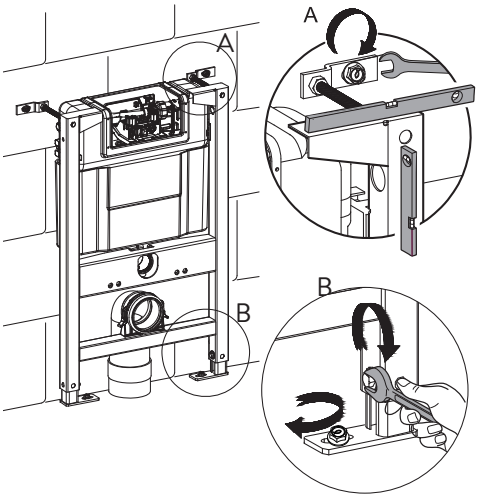

7

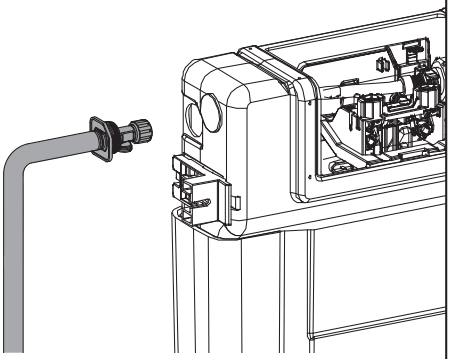

6

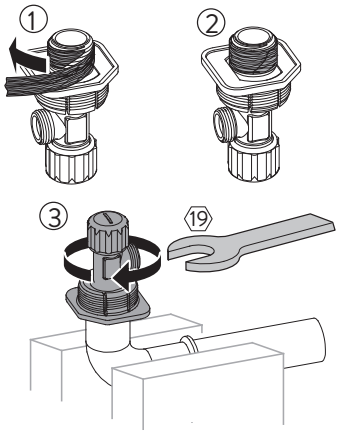

8

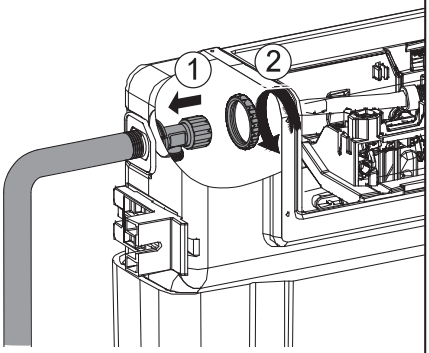

9

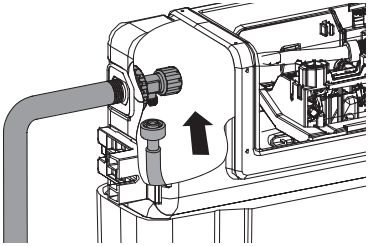

10

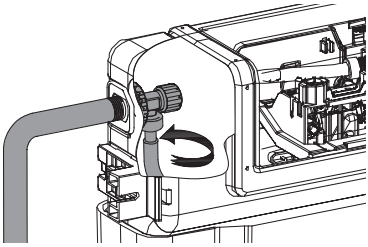

11

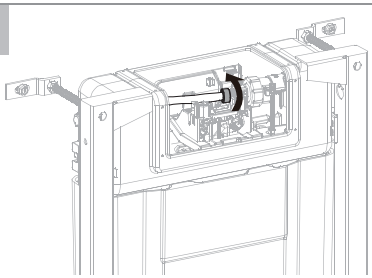

16

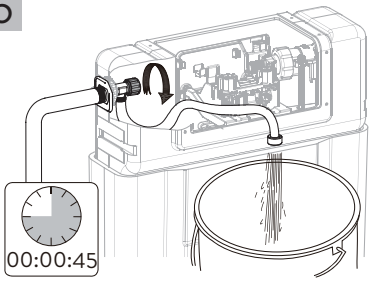

13

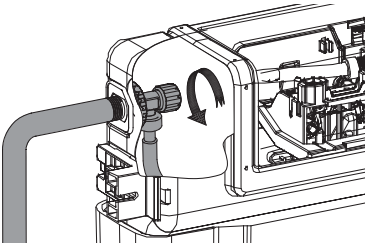

14

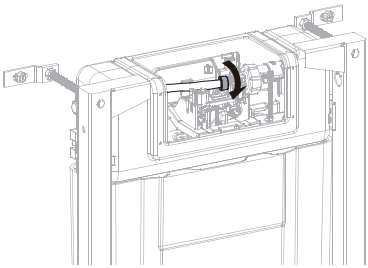

15

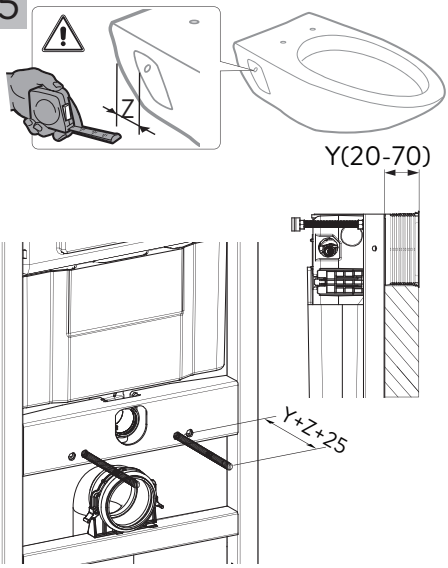

16

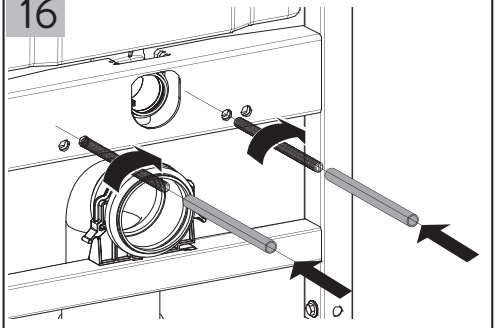

17

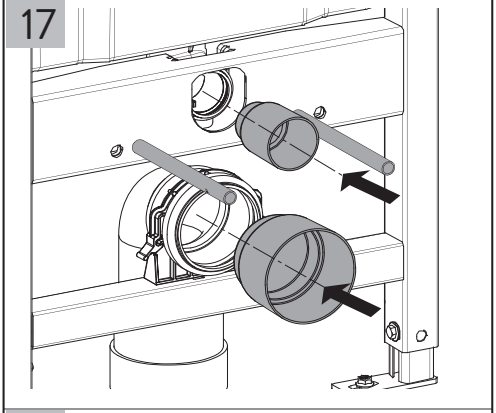

18

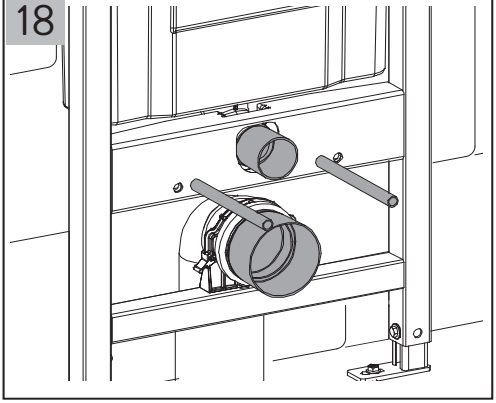

19 ①

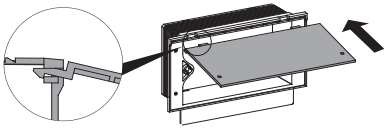

②

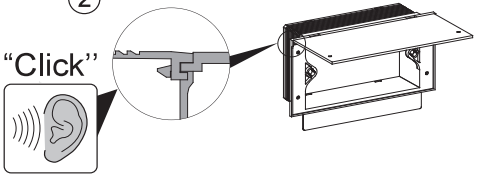

20

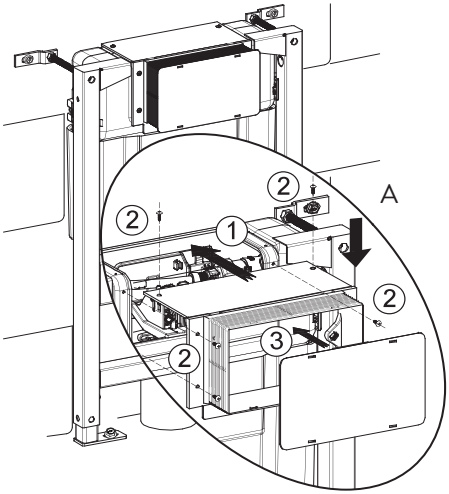

21

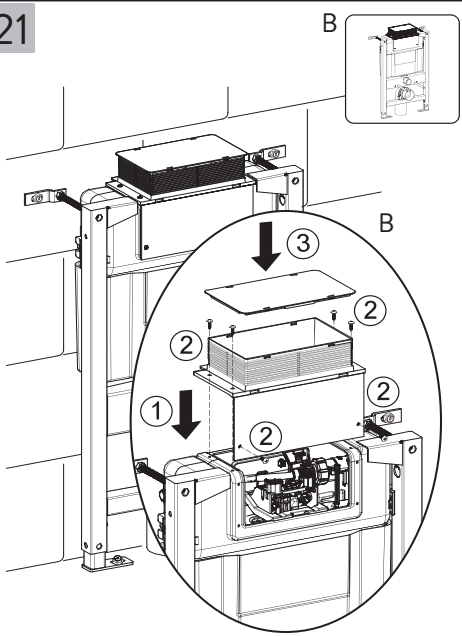

22

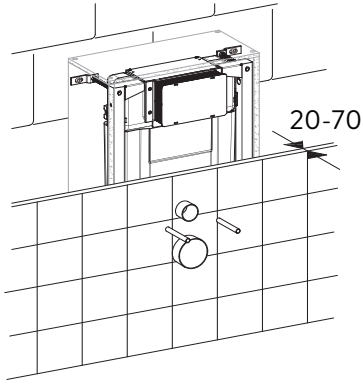

23

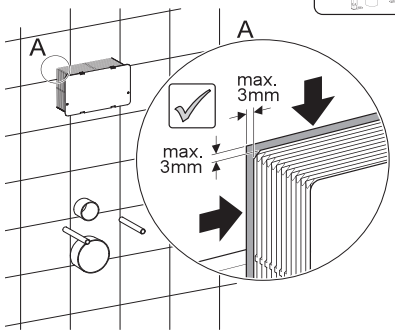

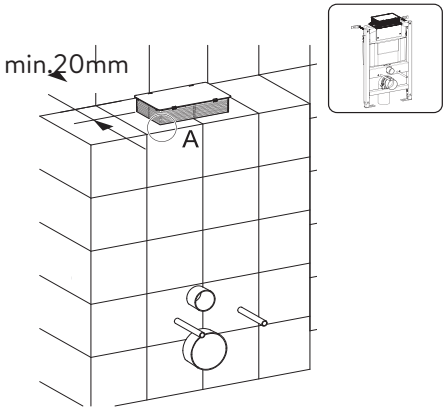

AQUAECO

WASHROOM AND PLUMBING SOLUTIONS

A member of SANIPEXGROUP

www.sanipexgroup.com

INP-K210-A01-ESG2-07-21