CT FORCE RANGE

A new high quality range of brass ended regenerative shower pumps from Salamander. Available as twin or single ended, positive head or universal this range is ideal for boosting hot and/or cold supplies to thermostatic or manual mixer valves, supplying a wide range of shower types and shower heads, individual taps, cisterns and whole house boosting applications.

WRAS APPROVED PRODUCT

Features

- Brass ended regenerative pump
- 1.5, 2.0 and 3.0 Bar performance options
- Crossover Technology
- Compact seal
- Continuously rated
- Fully automatic
- 22mm push fit flexible hoses with integral isolating valves on inlets
- Pre-wired with 1.25 metre power cable
- Anti-vibration feet
- 3 year warranty

Pump Dimensions

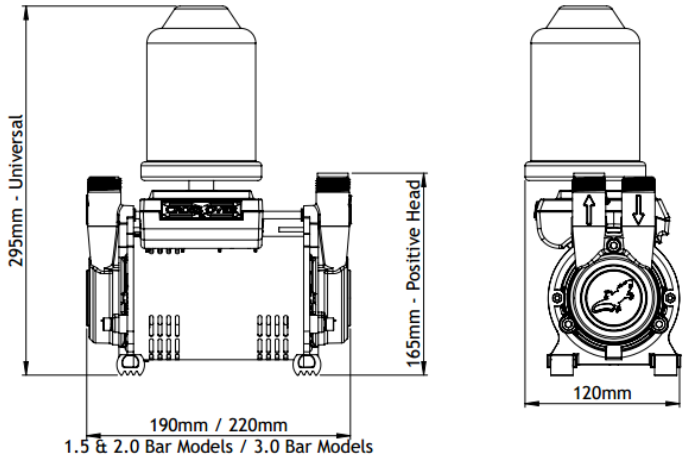

Performance

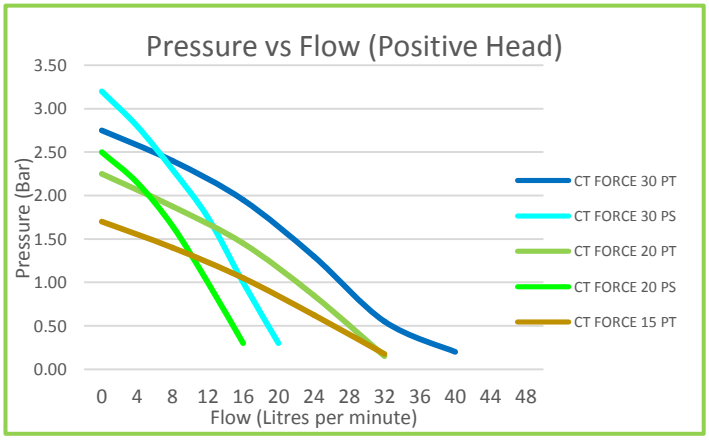

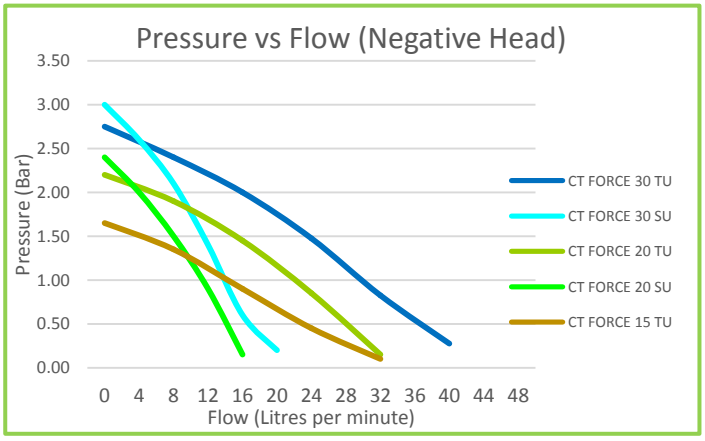

CT FORCE Technical Specification

Part No.	Description	Specification			Performance			Connection Type			Pump Volumetrics				Packed Pump Volumetrics			
		Electrical Input		Pump Type				Pump	Hoses	Isolators	Dimensions				Dimensions			
		230/1/50	Fuse	Regenerative	Pressure (kPa/Bar) at 16ltr/min	Pressure (kPa/Bar) at 8ltr/min	Max pressure (kPa/Bar) closed head	BSP	Push fit	Isolators integrated into the hoses	Weight (Kg)	Length (mm)	Width (mm)	Height (mm)	Weight (Kg)	Length (mm)	Width (mm)	Height (mm)
CT FORCE																		
FORCE 15 PT FORCE 15 IPT	1.5 Bar Twin End Positive Head Shower Pump	✓	3A	✓	100 (1.0)	130 (1.3)	150 (1.5)	¾"	22mm 21mm	✓	4.50	190	120	165	5.56	295	215	205
FORCE 20 PT FORCE 20 IPT	2.0 Bar Twin End Positive Head Shower Pump	✓	3A	✓	130 (1.3)	170 (1.7)	200 (2.0)	¾"	22mm 21mm	✓	4.84	190	120	165	5.89	295	215	205
FORCE 30 PT FORCE 30 IPT	3.0 Bar Twin End Positive Head Shower Pump	✓	3A	✓	200 (2.0)	250 (2.5)	300 (3.0)	¾"	22mm 21mm	✓	6.37	220	120	165	7.43	295	215	205
FORCE 20 PS FORCE 20 IPS	2.0 Bar Single End Positive Head Shower Pump	✓	3A	✓	130 (1.3)	170 (1.7)	200 (2.0)	¾"	22mm 21mm	✓	4.22	190	120	165	5.27	295	215	205
FORCE 30 PS FORCE 30 IPS	3.0 Bar Single End Positive Head Shower Pump	✓	3A	✓	200 (2.0)	250 (2.5)	300 (3.0)	¾"	22mm 21mm	✓	5.75	220	120	165	6.80	295	215	205
FORCE 15 TU FORCE 15 ITU	1.5 Bar Twin End Positive and Negative Head Shower Pump	✓	3A	✓	100 (1.0)	130 (1.3)	150 (1.5)	¾"	22mm 21mm	✓	5.20	190	130	295	6.32	295	215	365
FORCE 20 TU FORCE 20 ITU	2.0 Bar Twin End Positive and Negative Head Shower Pump	✓	3A	✓	130 (1.3)	170 (1.7)	200 (2.0)	¾"	22mm 21mm	✓	5.53	190	130	295	6.65	295	215	365
FORCE 30 TU FORCE 30 ITU	3.0 Bar Twin End Positive and Negative Head Shower Pump	✓	3A	✓	200 (2.0)	250 (2.5)	300 (3.0)	¾"	22mm 21mm	✓	7.07	220	130	295	8.19	295	215	365
FORCE 20 SU FORCE 20 ISU	2.0 Bar Single End Positive and Negative Head Shower Pump	✓	3A	✓	130 (1.3)	170 (1.7)	200 (2.0)	¾"	22mm 21mm	✓	4.92	190	130	295	6.03	295	215	365
FORCE 30 SU FORCE 30 ISU	3.0 Bar Single End Positive and Negative Head Shower Pump	✓	3A	✓	200 (2.0)	250 (2.5)	300 (3.0)	¾"	22mm 21mm	✓	6.45	220	130	295	7.56	295	215	365