searchlight

ASSEMBLY INSTRUCTIONS

IP44
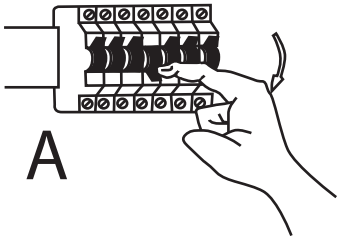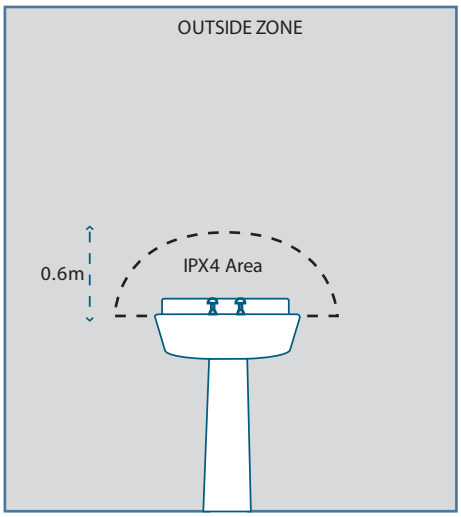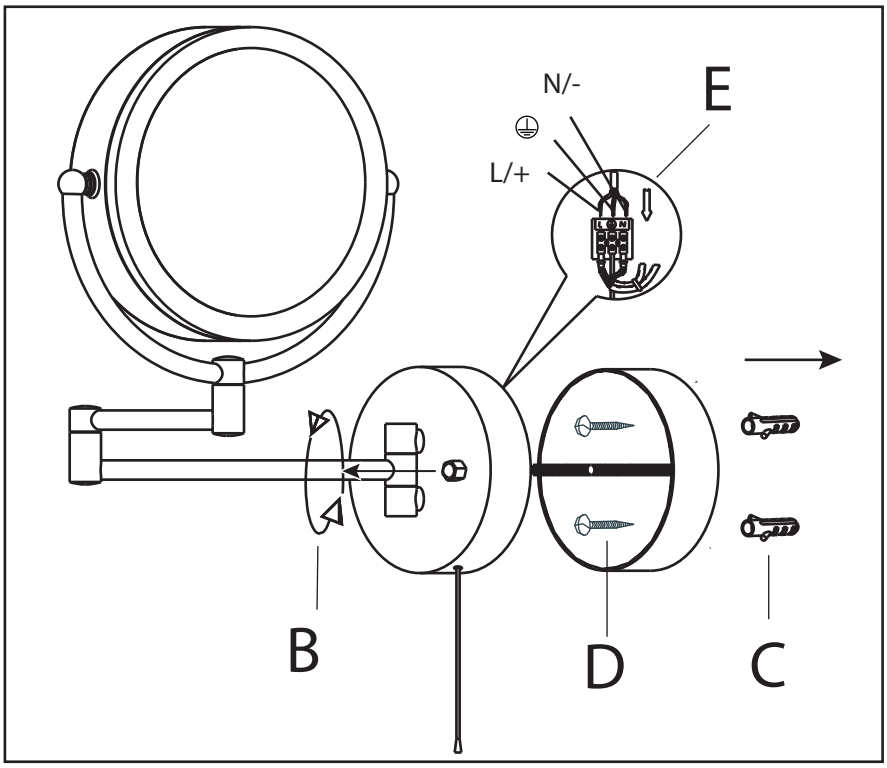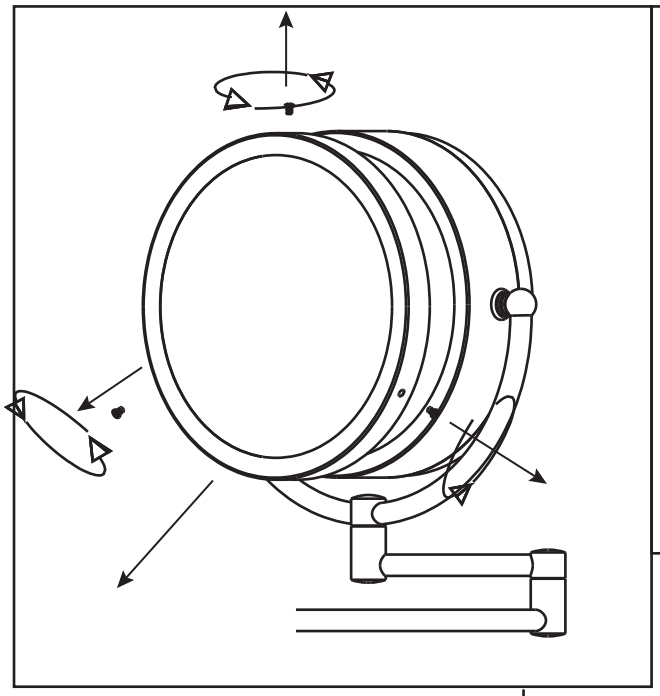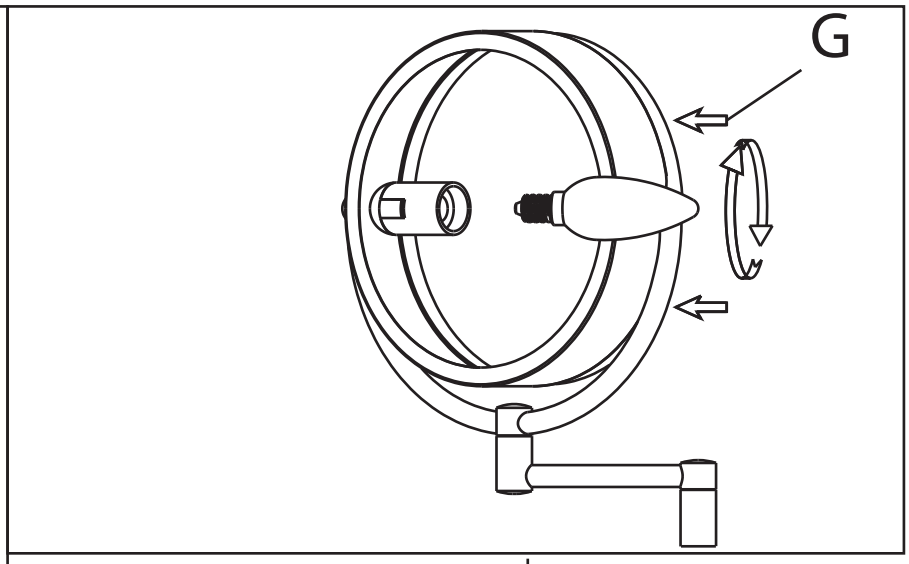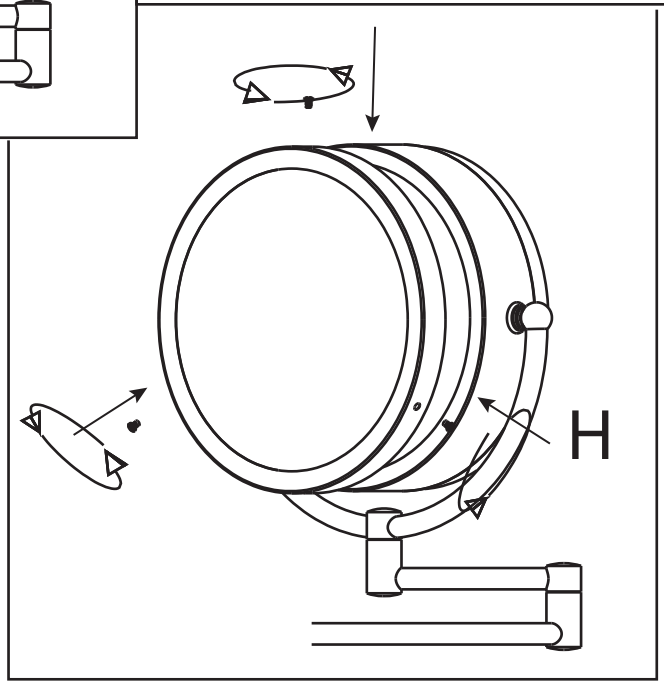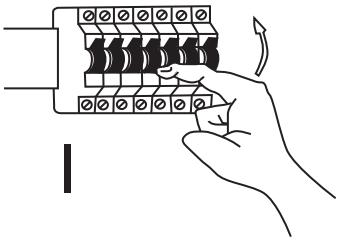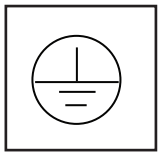
11824
QL 00107