searchlight

ASSEMBLY INSTRUCTIONS

1131-31
QL 00079

A

B

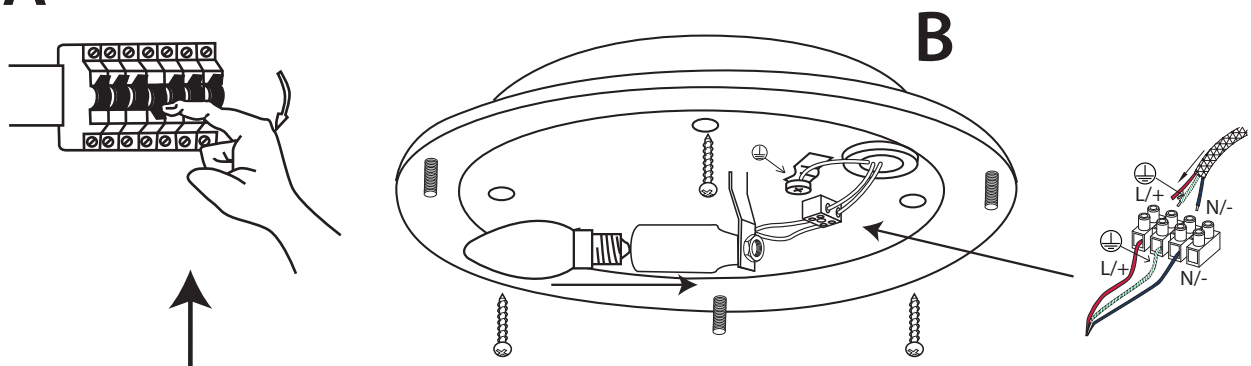

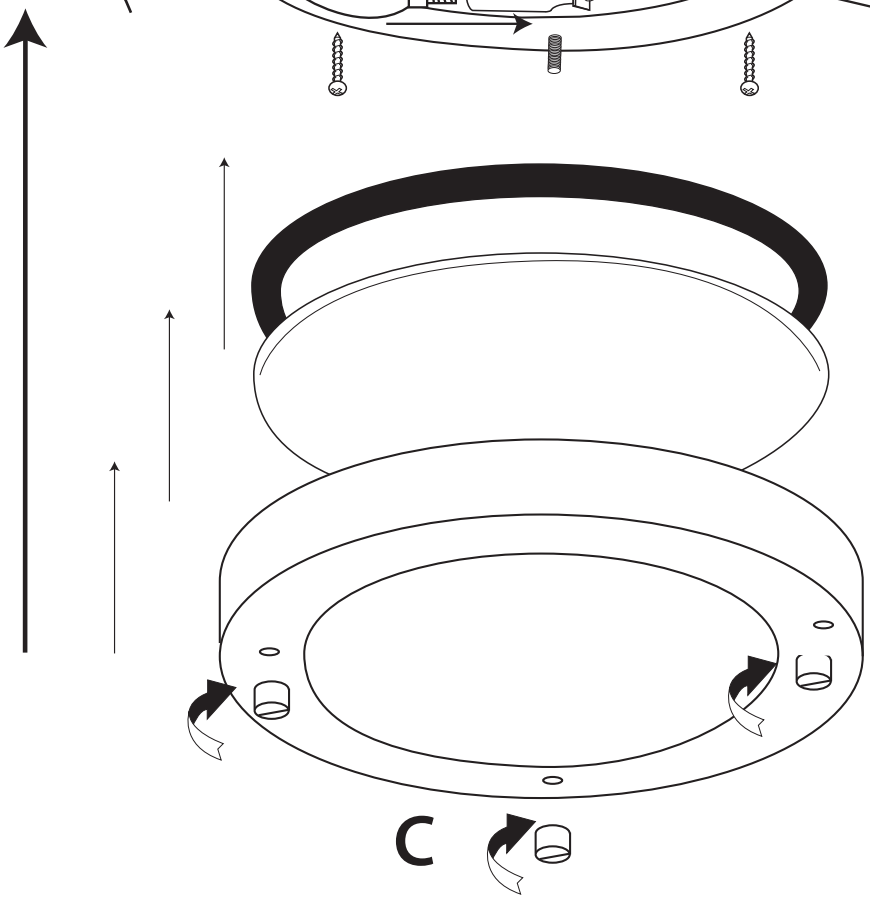

C

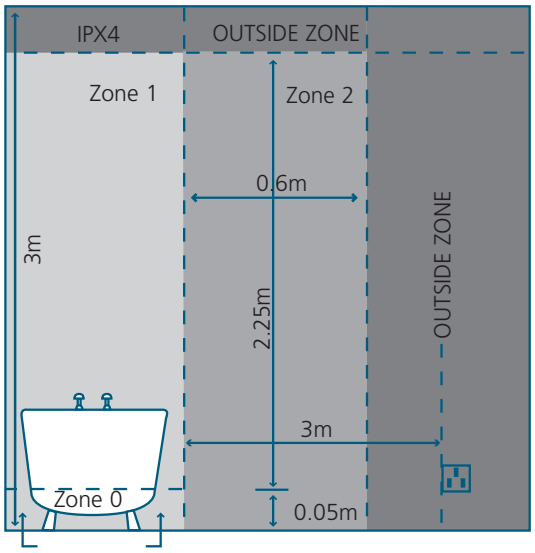

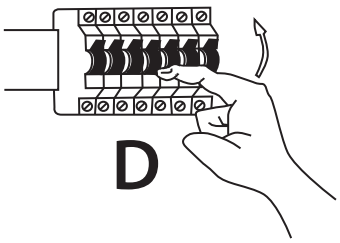

D