RAK
CERAMICS

Installation Instruction Manual
Wash Basin with Half Pedestal

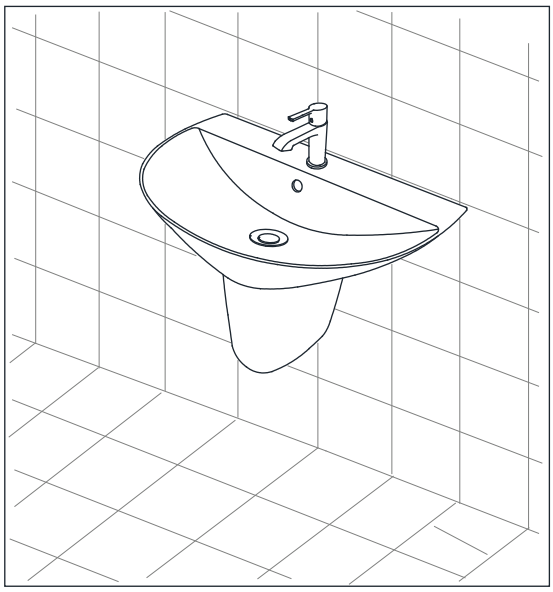

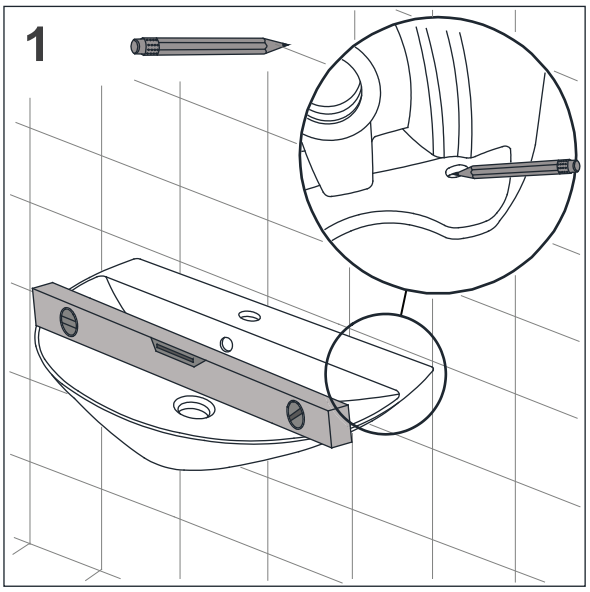

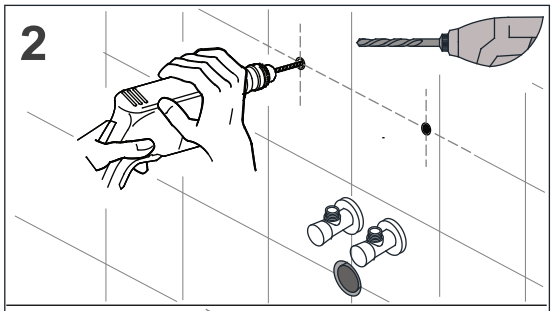

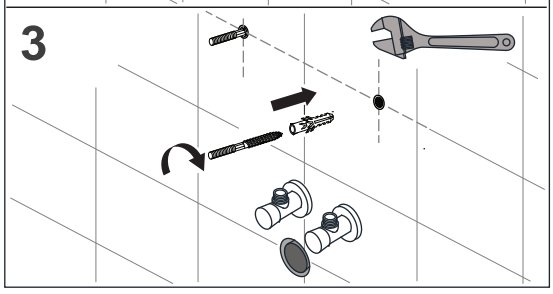

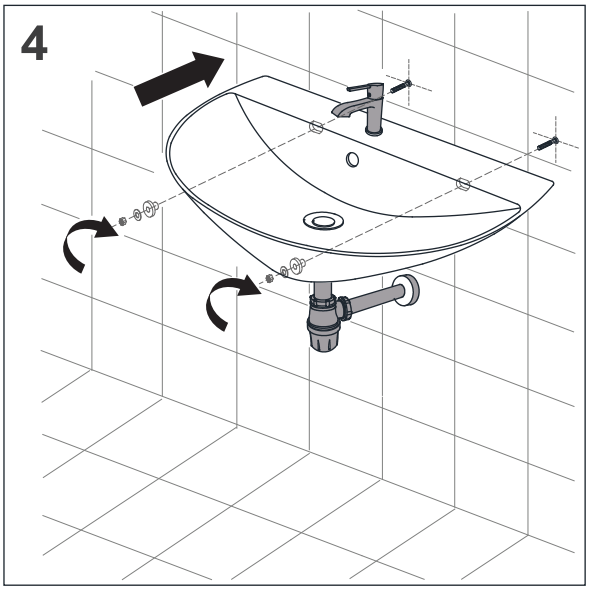

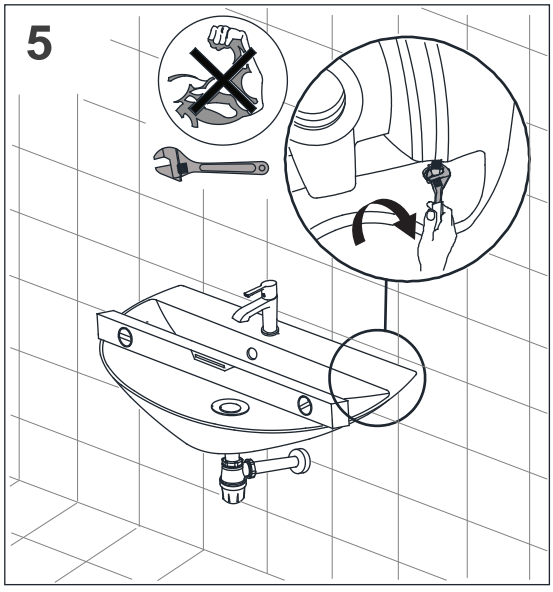

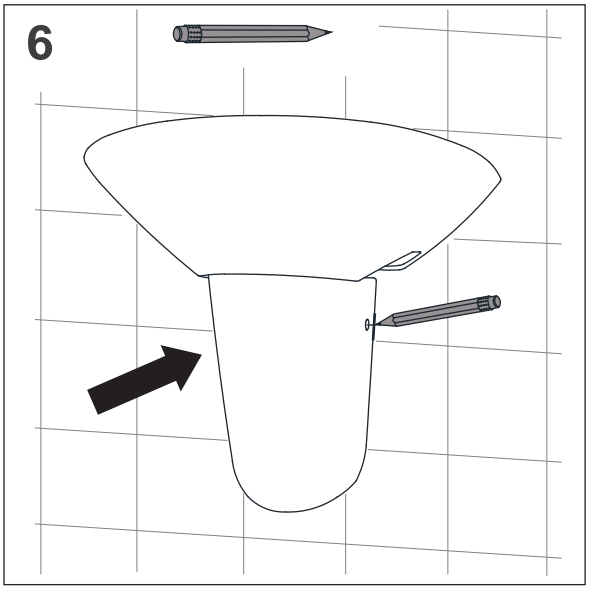

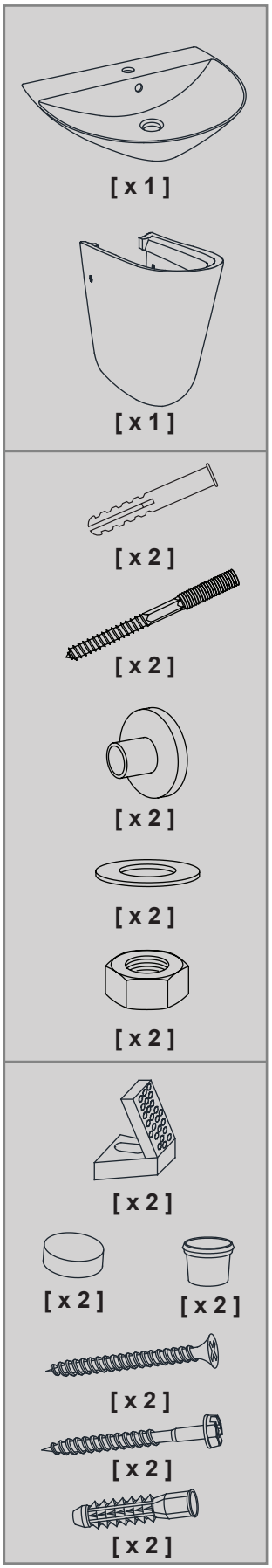

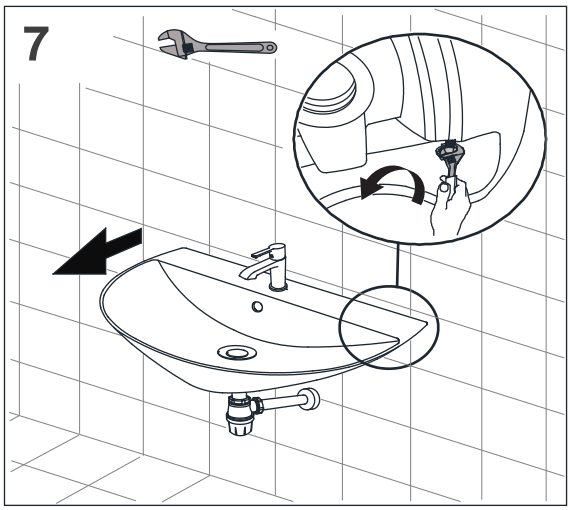
7

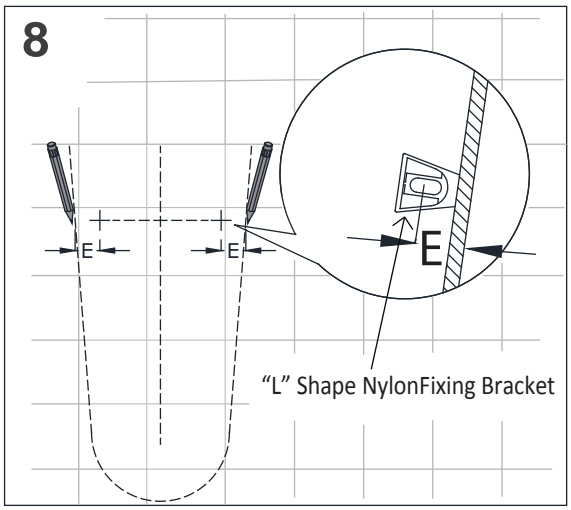
8
E
E
E
"L" Shape NylonFixing Bracket

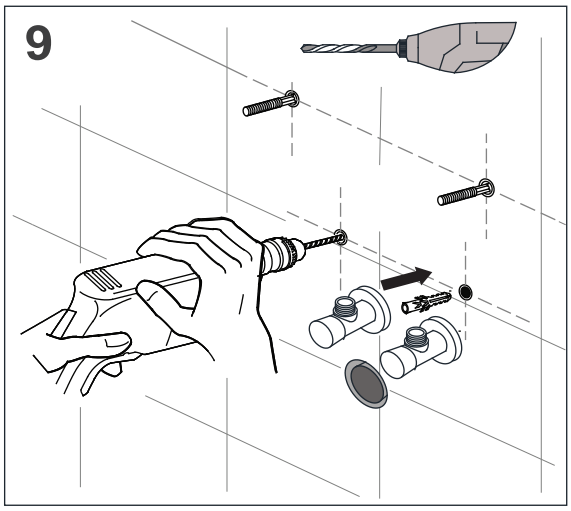
9

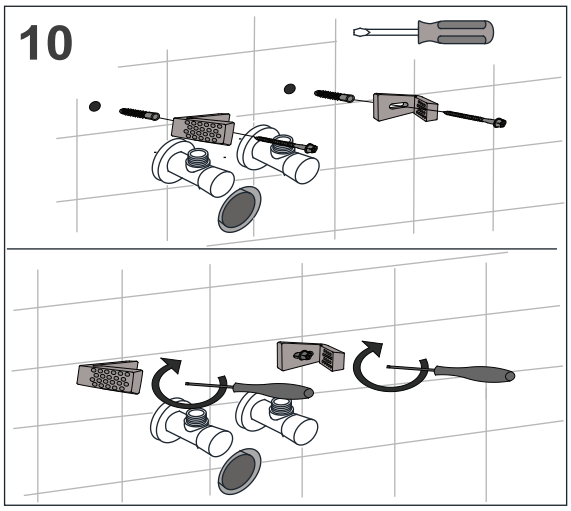
10

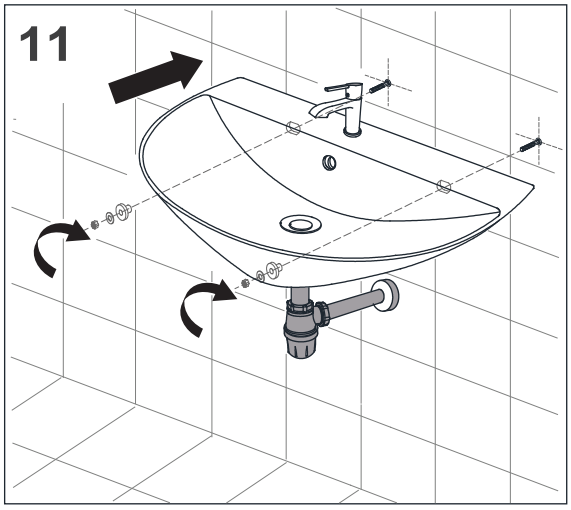
11

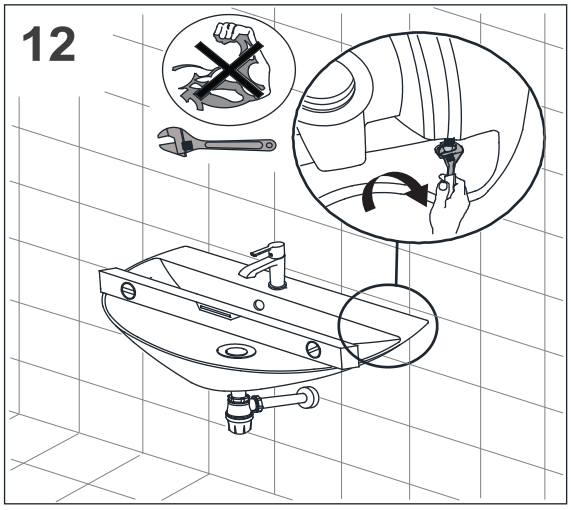
12

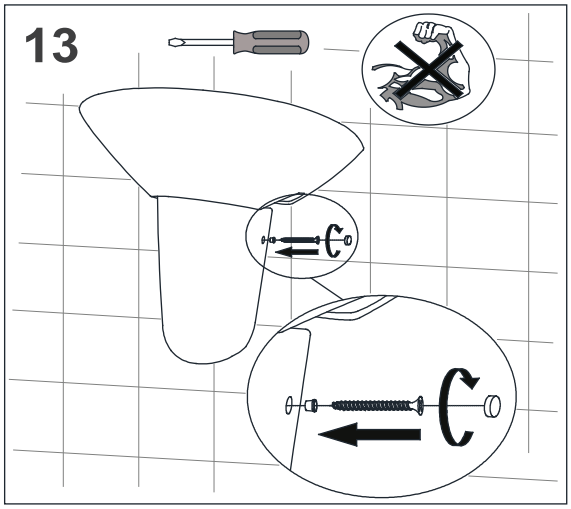
13

14
24
SILICONE
SILICONE

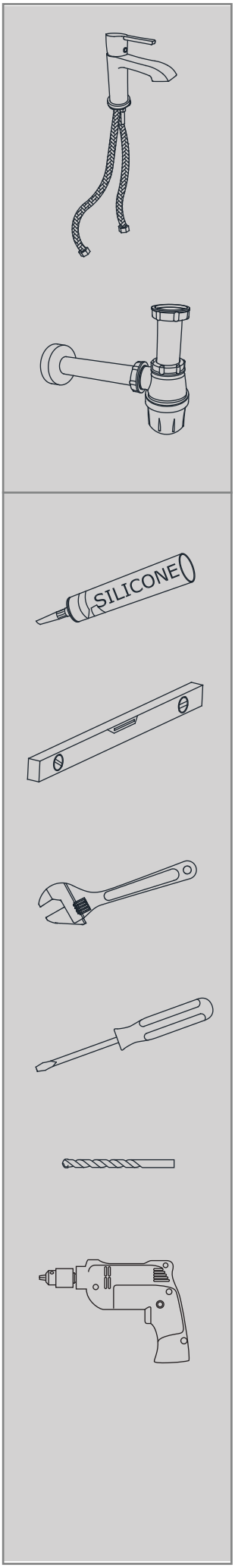
SILICONE