INSTALLATION MANUAL (2)

Hinged Door + Side Panel

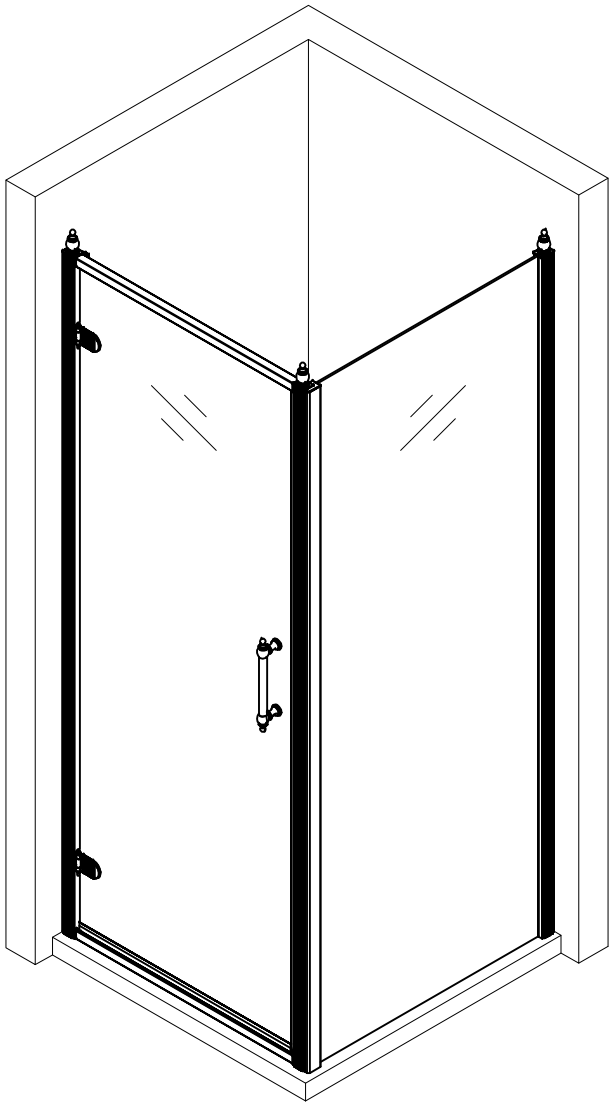

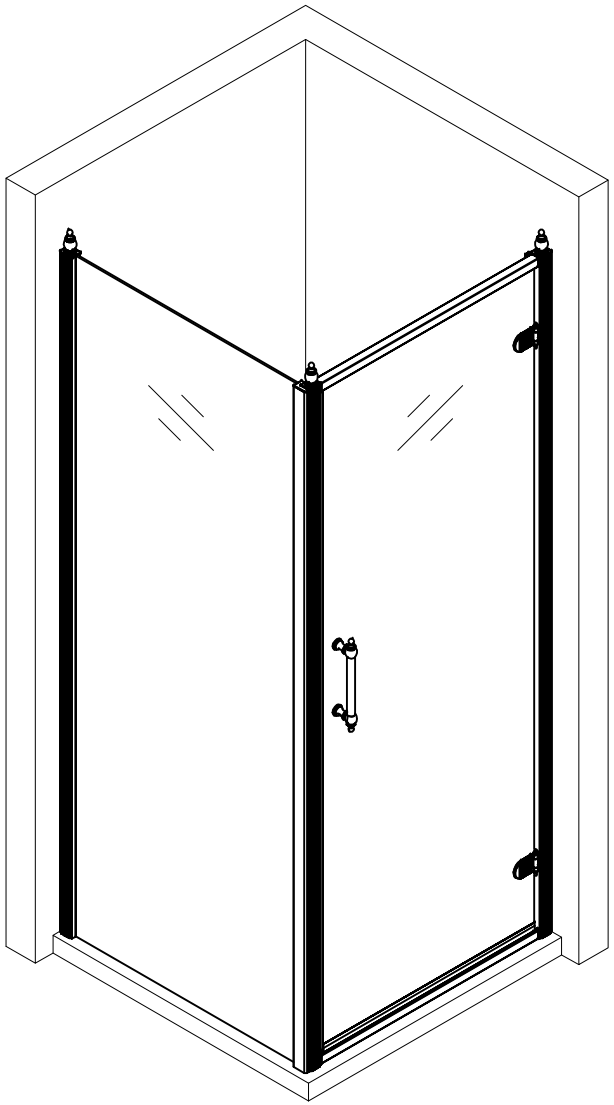

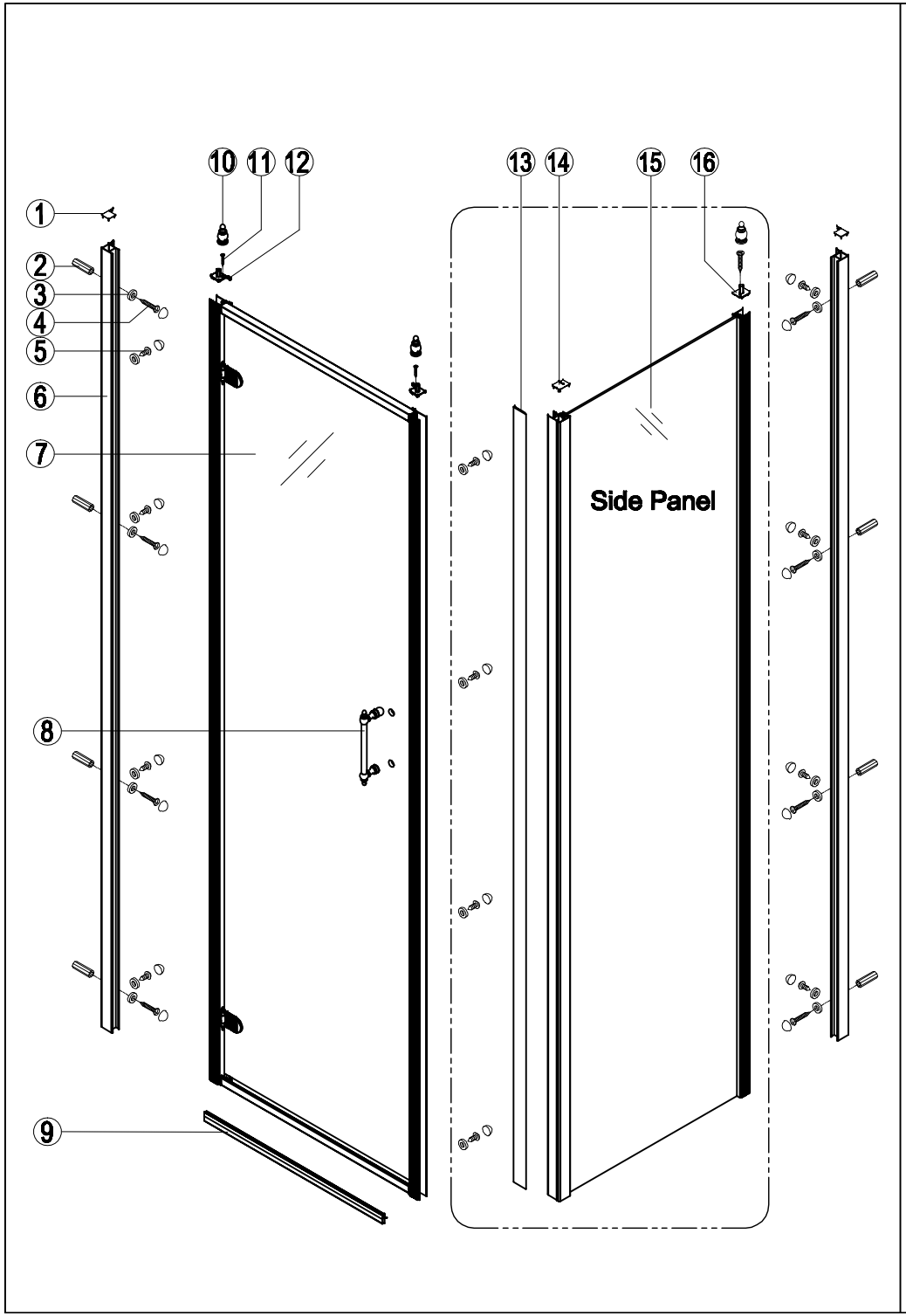
1
2
3
4
5
6
7
8
9
10
11
12
13
14
15
16
Side Panel

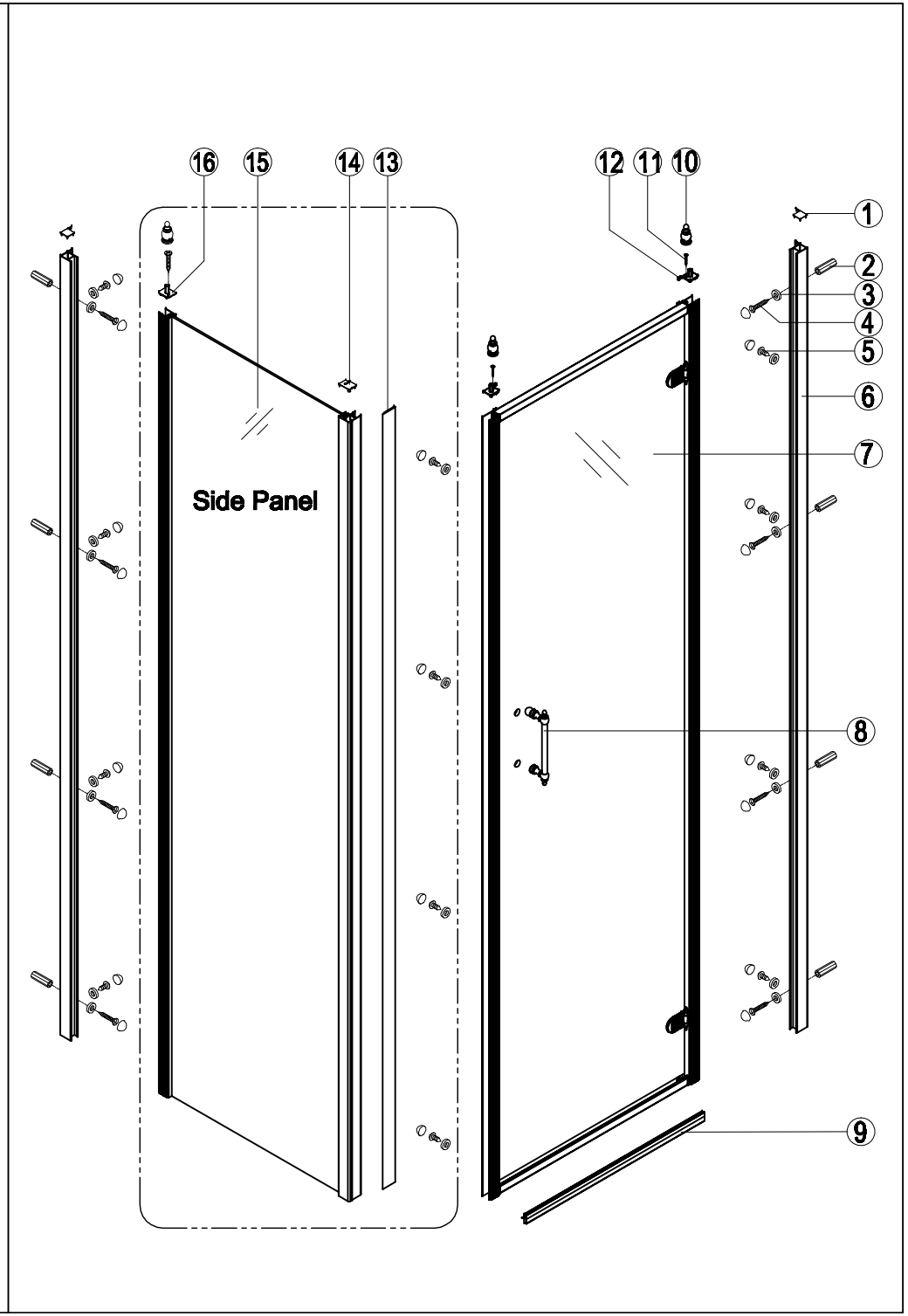
16
15
14
13
12
11
10
1
2
3
4
5
6
7
8
9
Side Panel

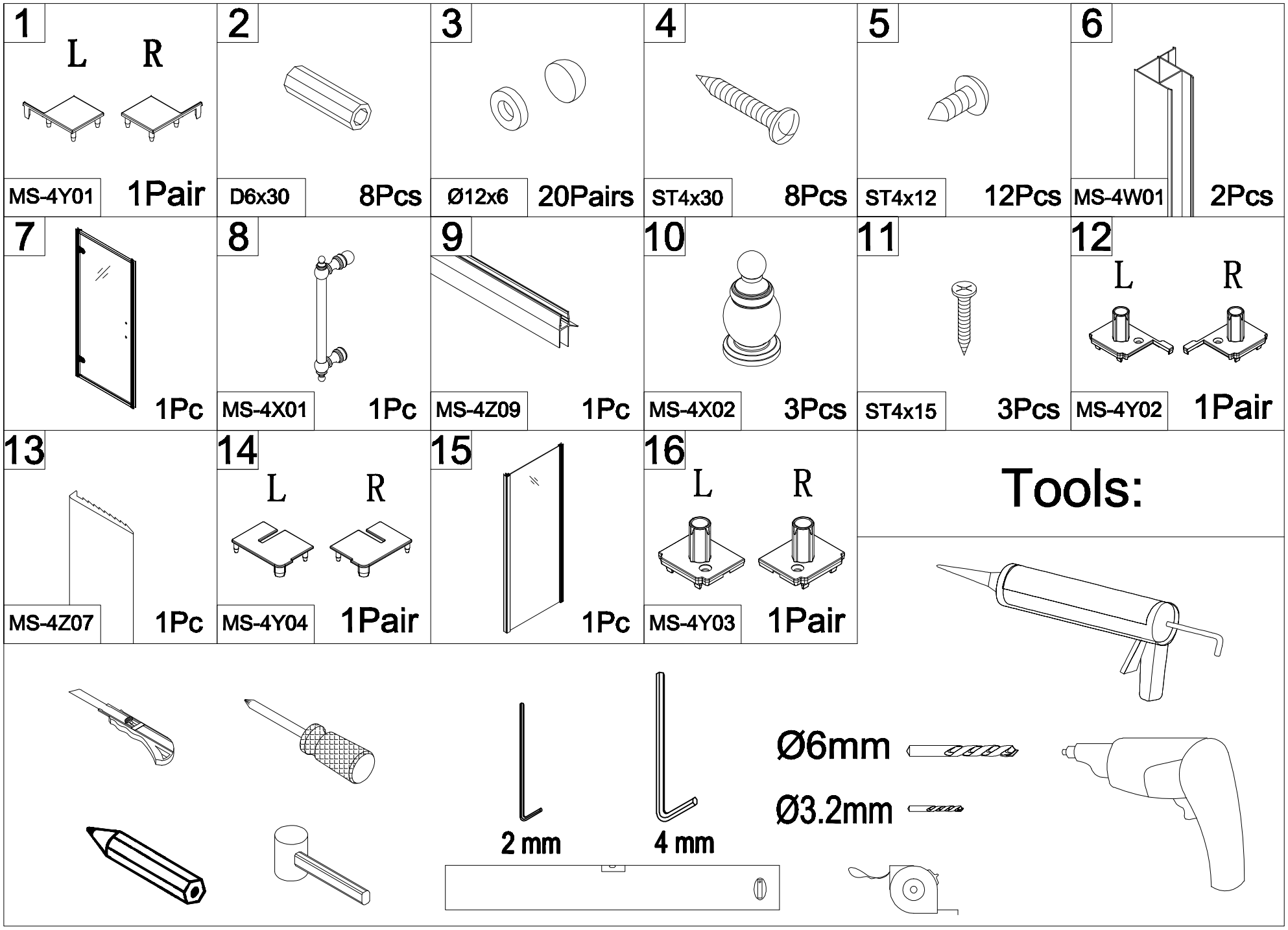
1
L
R
MS-4Y01
1Pair
2
D6x30
8Pcs
3
Ø12x6
20Pairs
4
ST4x30
8Pcs
5
ST4x12
12Pcs
6
MS-4W01
2Pcs
7
1Pc
8
MS-4X01
1Pc
9
MS-4Z09
1Pc
10
MS-4X02
3Pcs
11
ST4x15
3Pcs
12
L
R
MS-4Y02
1Pair
13
MS-4Z07
1Pc
14
L
R
MS-4Y04
1Pair
15
1Pc
16
L
R
MS-4Y03
1Pair
Tools:
Ø6mm
Ø3.2mm
2 mm
4 mm

1

	L	W		L	W
700	670-690		700	670-690	
800	770-790	**760-795**	800	770-790	760-795
900		860-895	900		860-895

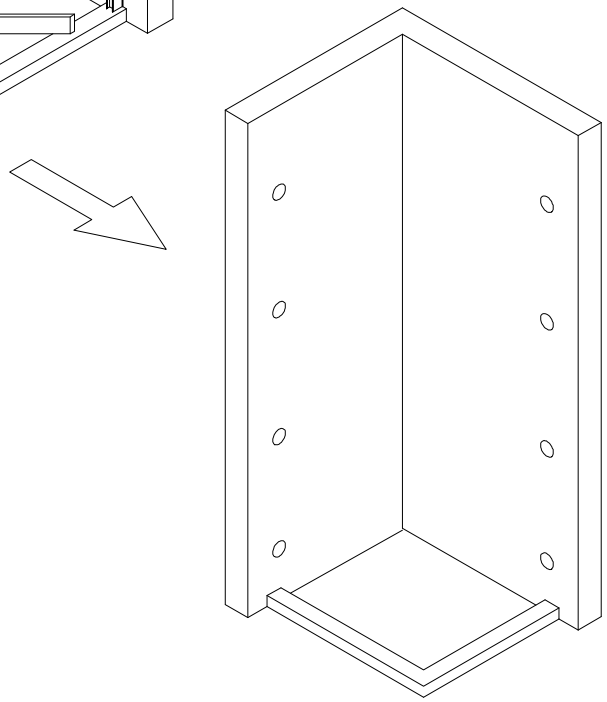

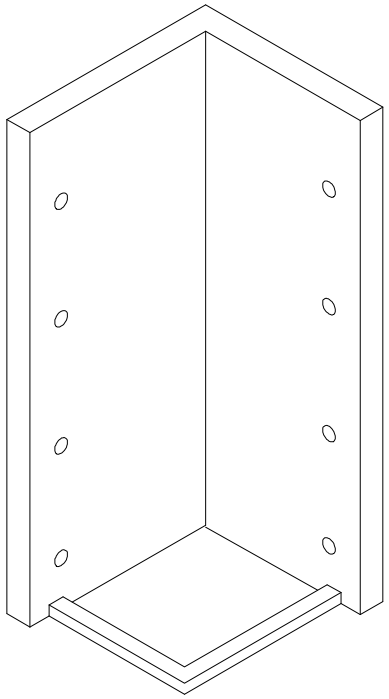

1

1-1

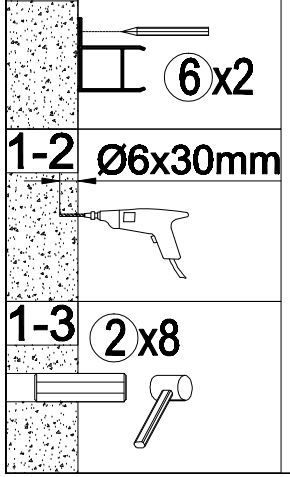

1-2

1-3

1-1

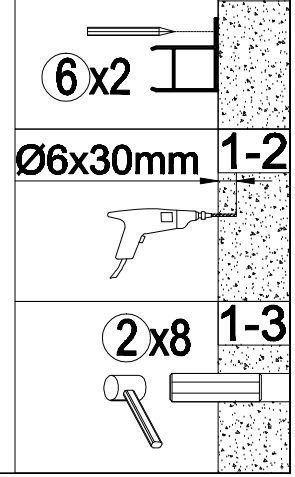

1-2

1-3

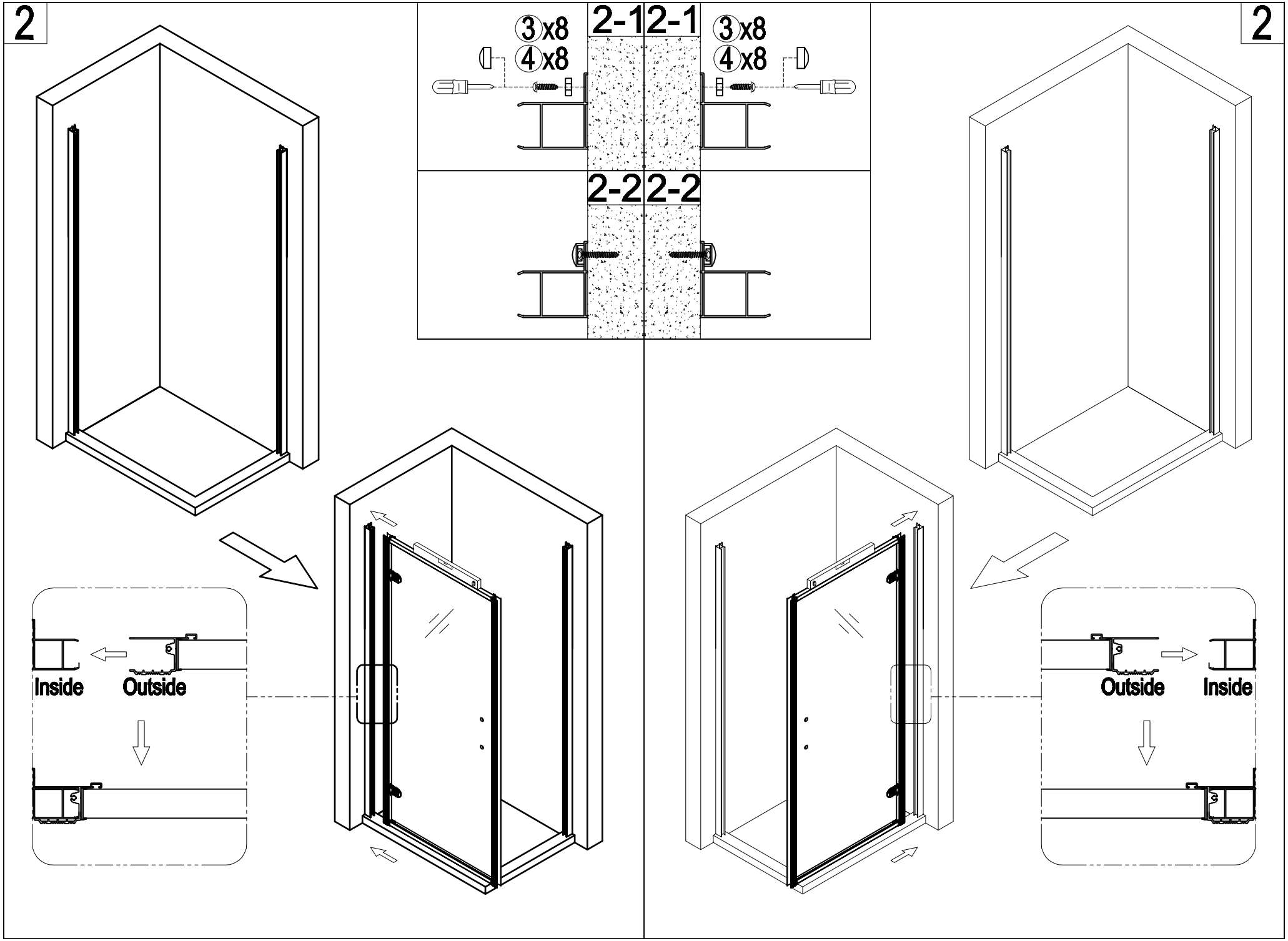
2
2
③x8
④x8
2-1
2-1
③x8
④x8
2-2
2-2
Inside
Outside
Outside
Inside

3

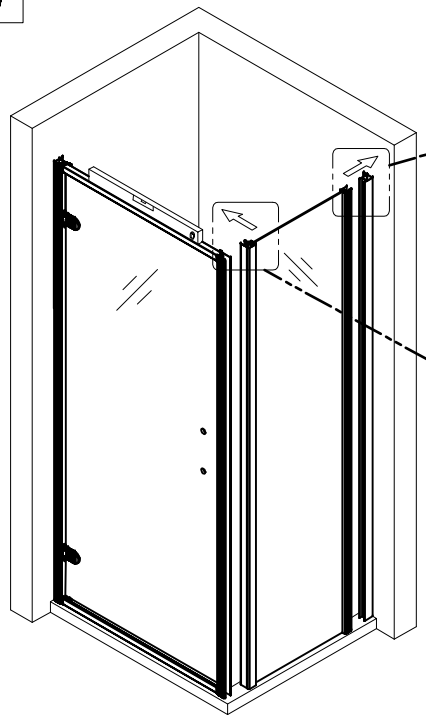

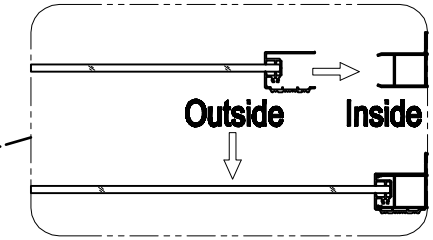
Outside
Inside

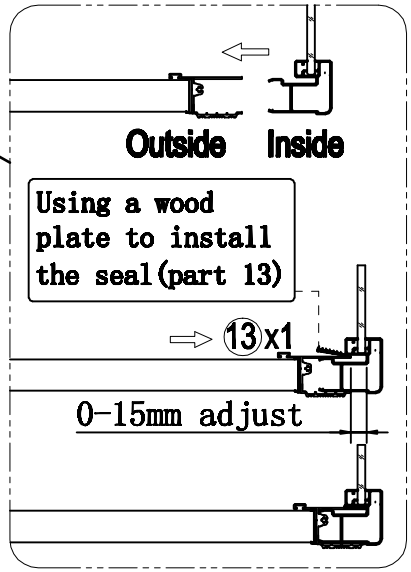
Outside
Inside
Using a wood plate to install the seal(part 13)
⑬x1
0-15mm adjust

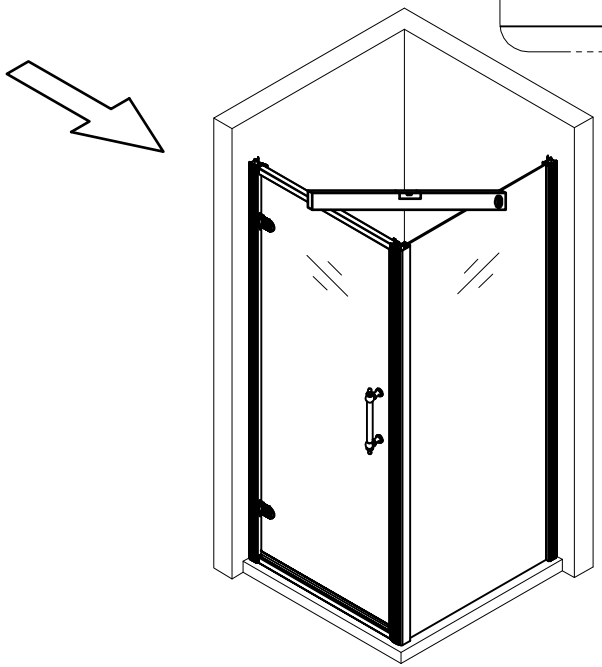

3

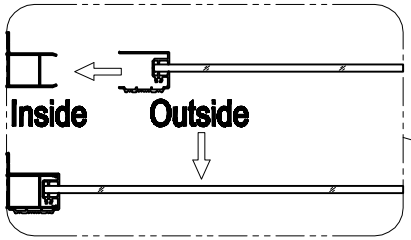
Inside
Outside

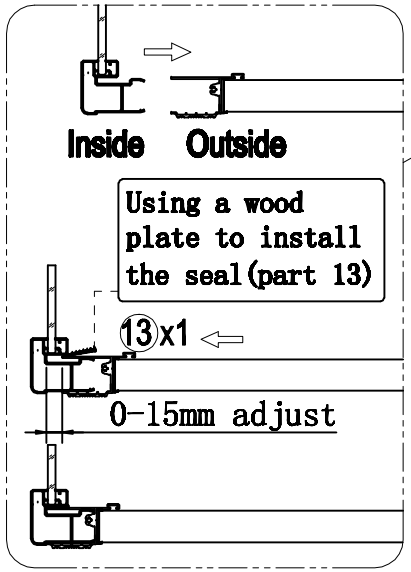
Inside
Outside
Using a wood plate to install the seal(part 13)
⑬x1
0-15mm adjust

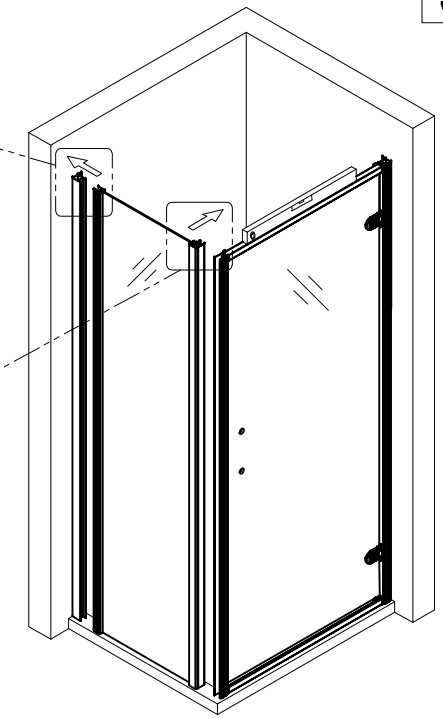

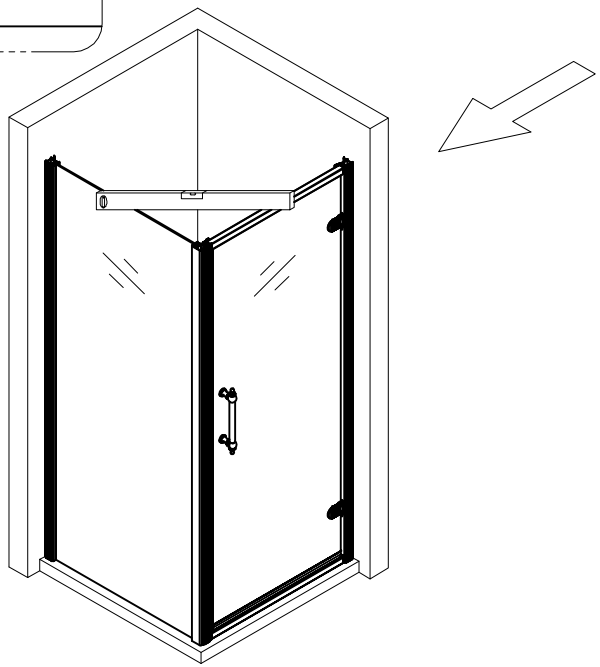

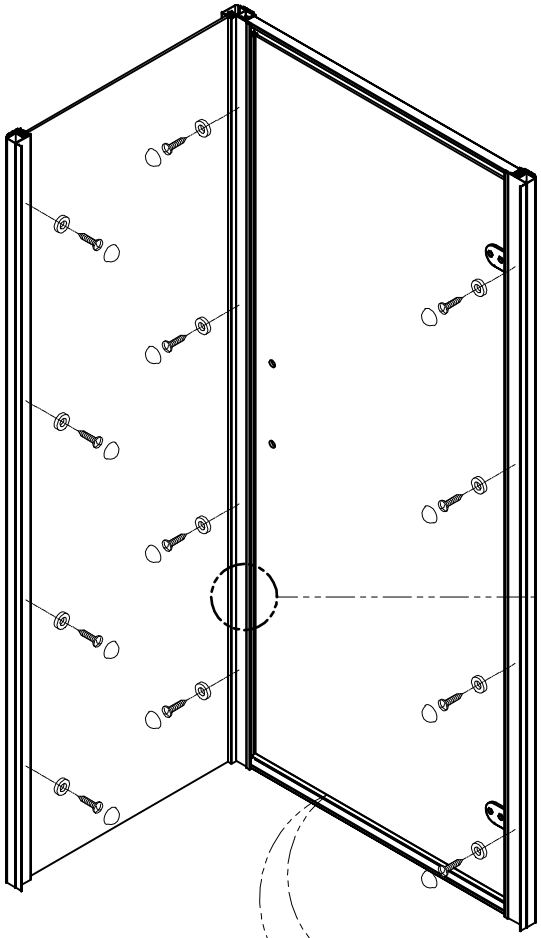

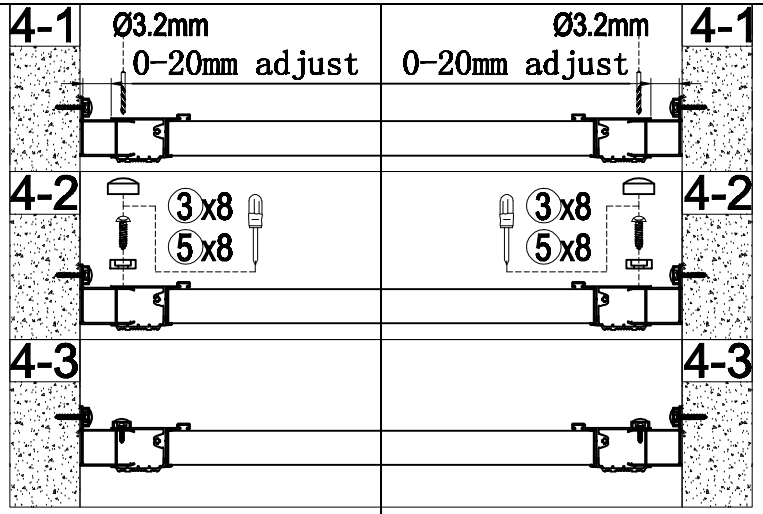

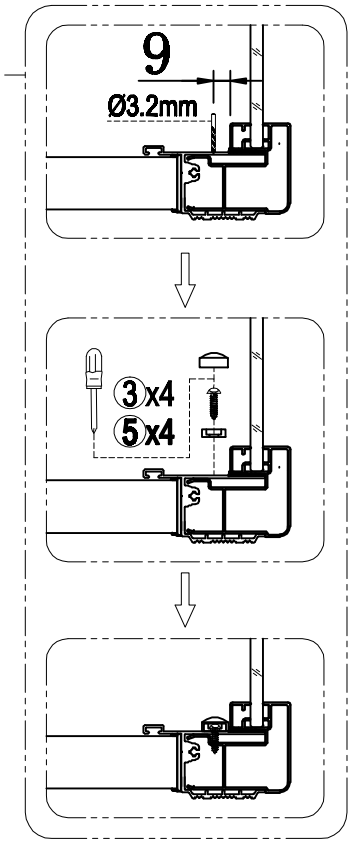

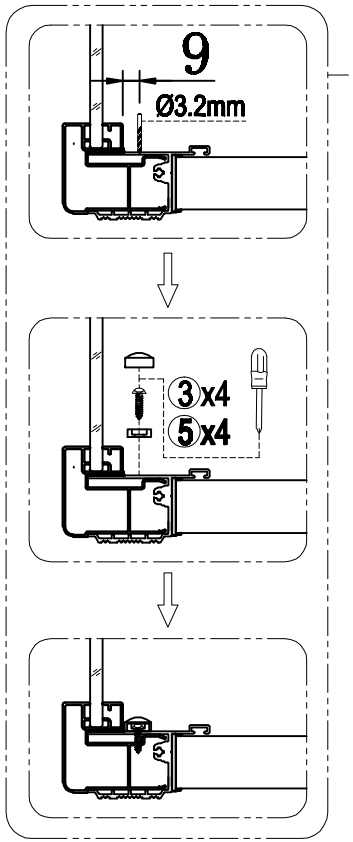

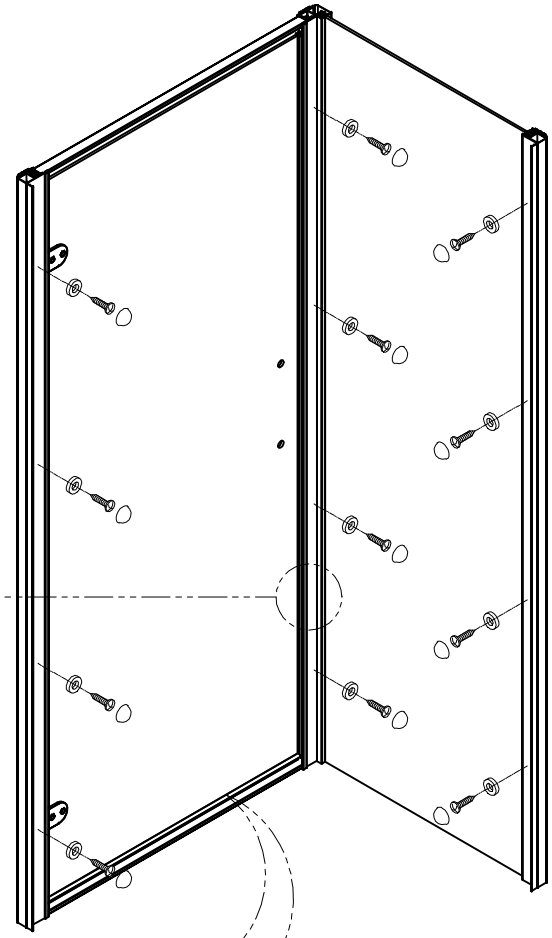

IT IS VERY IMPORTANT TO HAVE THE BOTTOM OF THE GLASS PARALLEL TO THE TRAY TOP FACE, IT MUST HAVE A 35 MM EVEN GAP ALL THE WAY ALONG.

IT IS VERY IMPORTANT TO HAVE THE BOTTOM OF THE GLASS PARALLEL TO THE TRAY TOP FACE, IT MUST HAVE A 35 MM EVEN GAP ALL THE WAY ALONG.

4

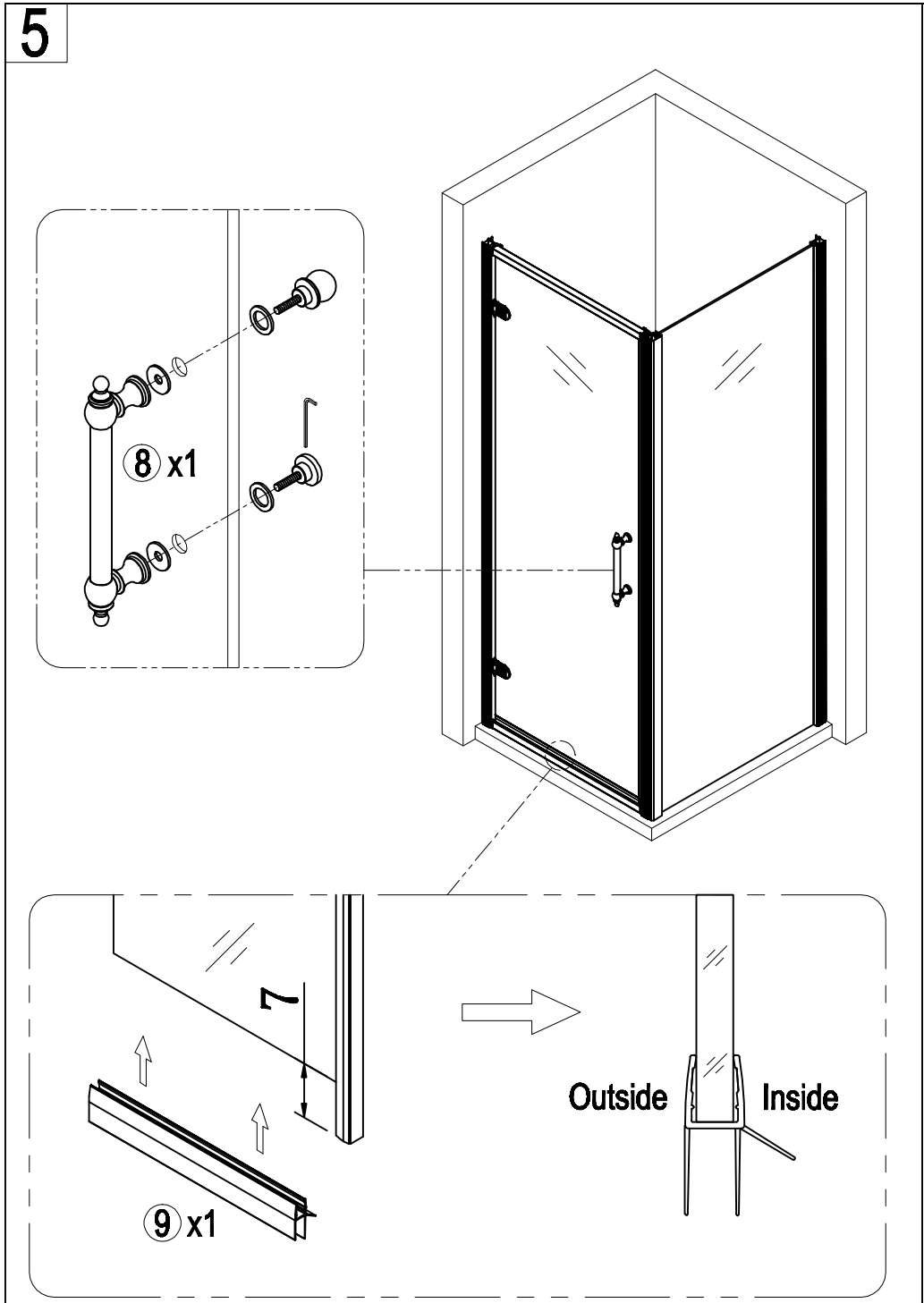

5

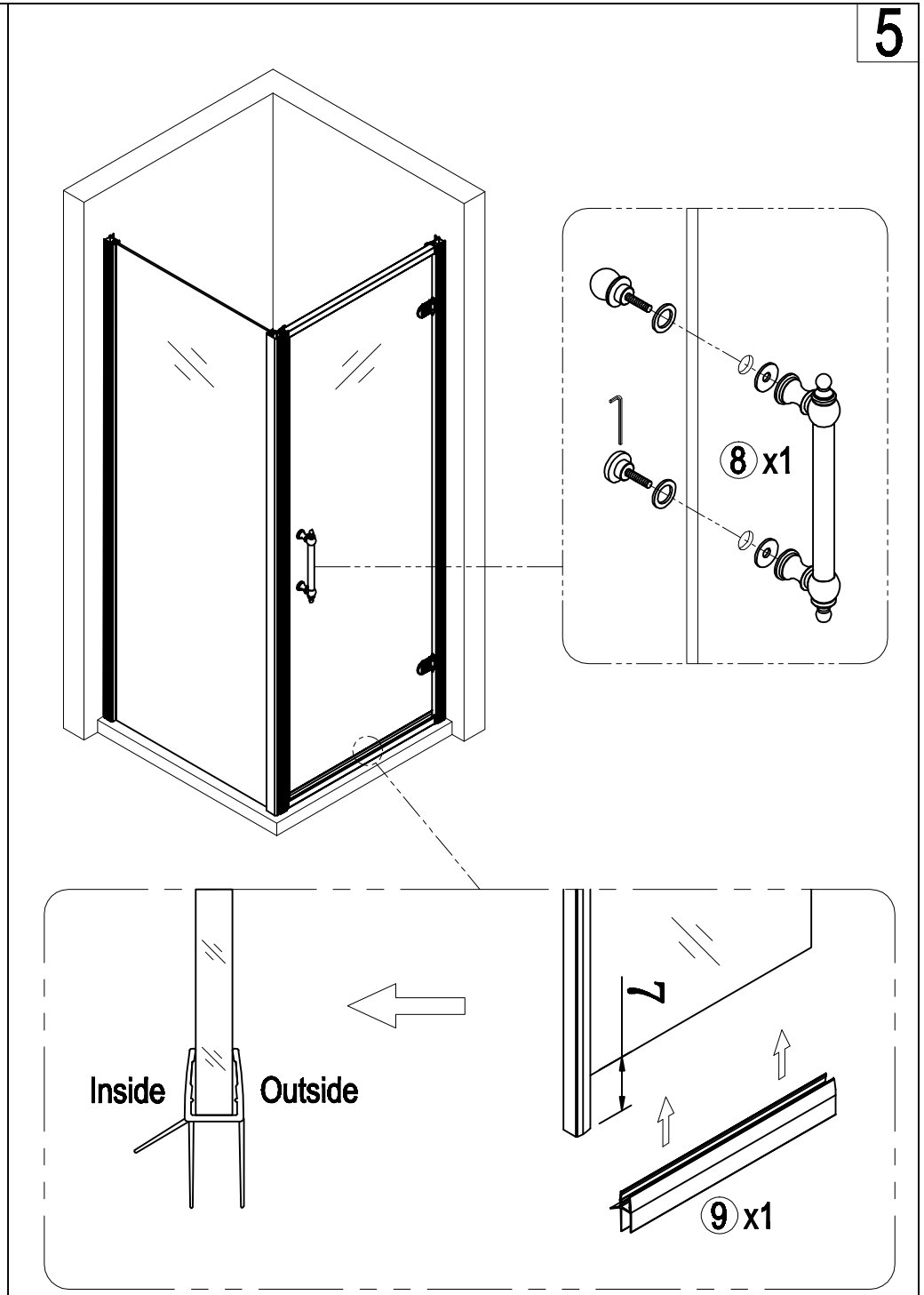

6

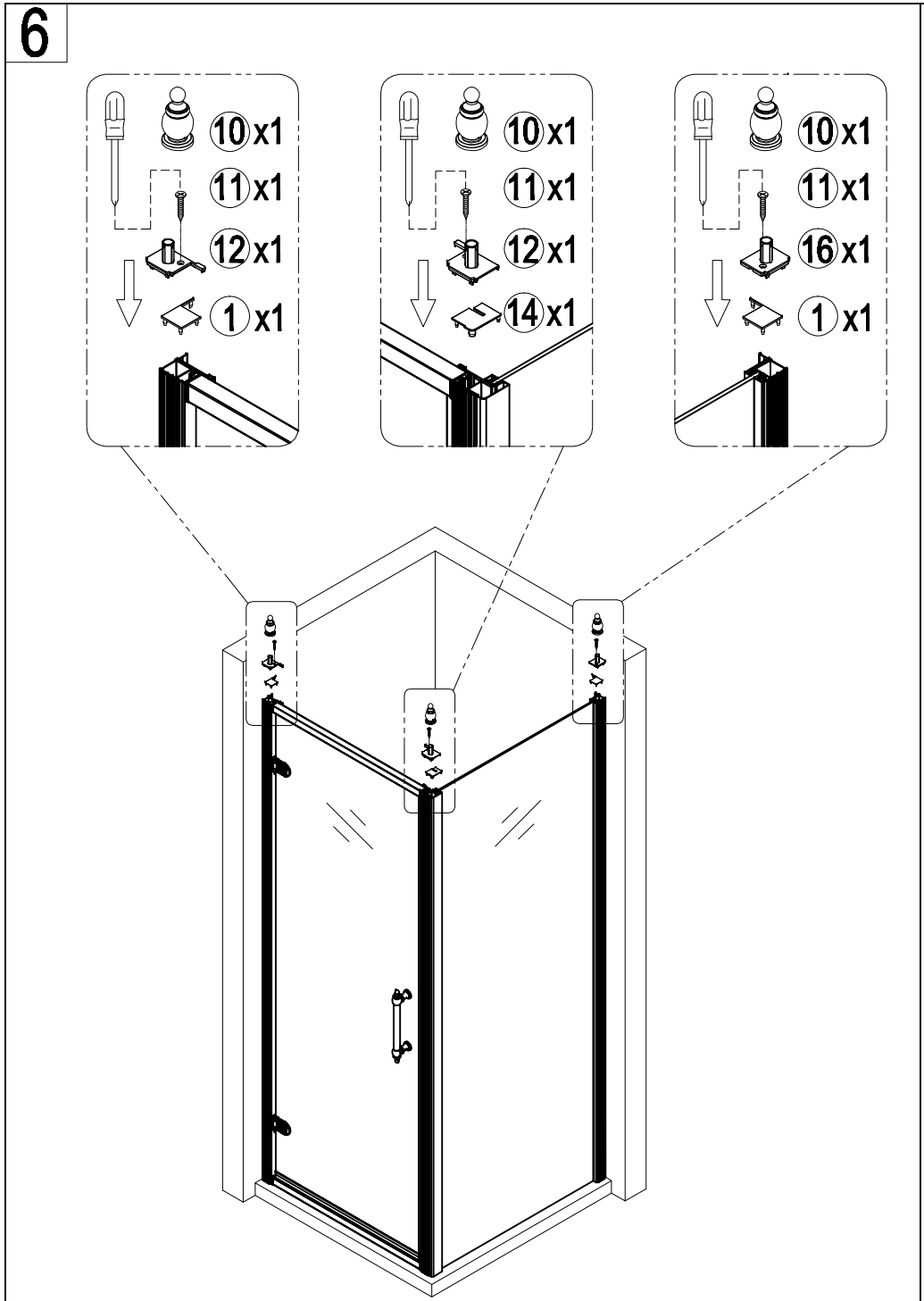
10 x1
11 x1
12 x1
1 x1
10 x1
11 x1
12 x1
14 x1
10 x1
11 x1
16 x1
1 x1

6

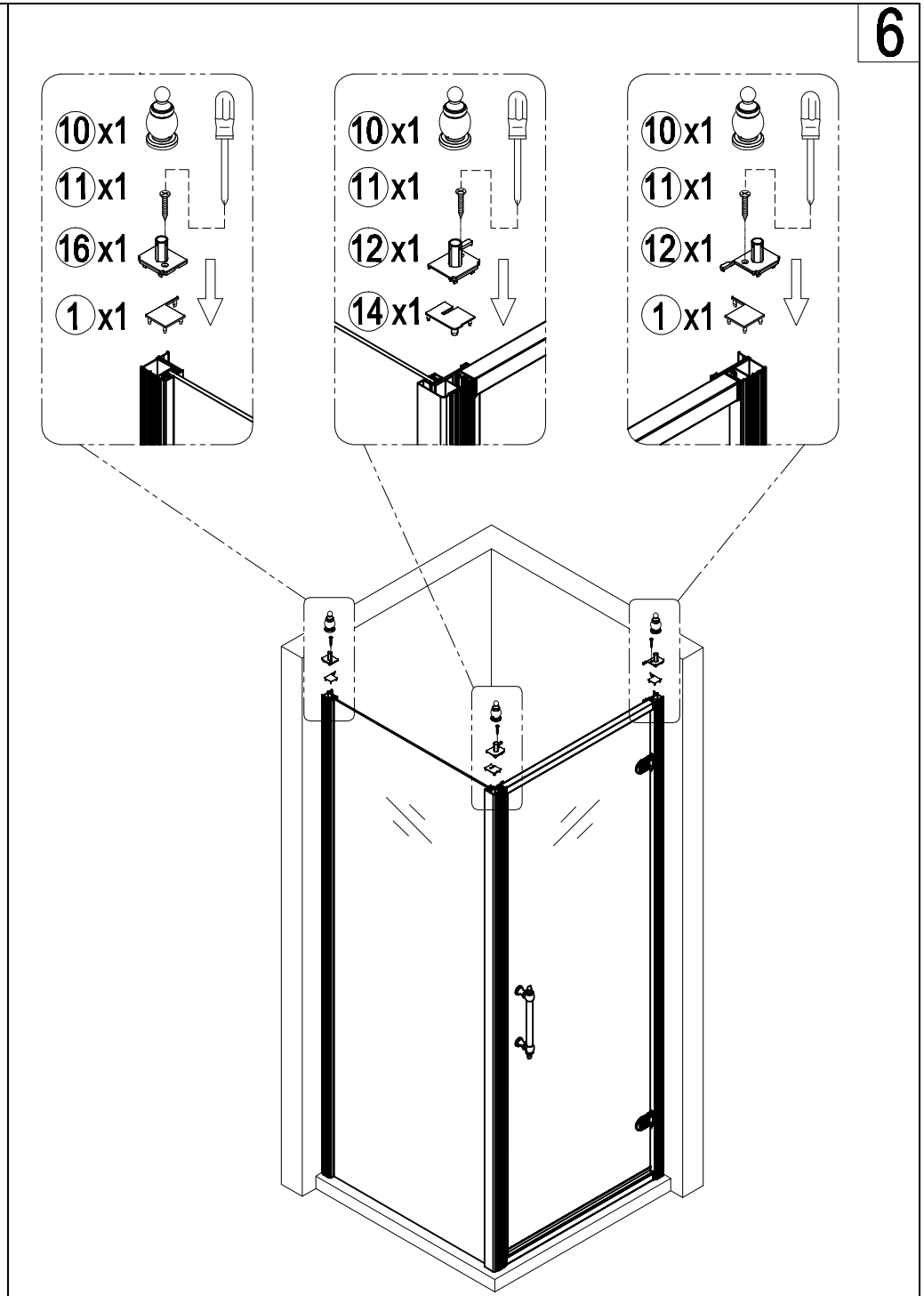
10 x1
11 x1
16 x1
1 x1
10 x1
11 x1
12 x1
14 x1
10 x1
11 x1
12 x1
1 x1

Care Instructions:

Do not use your shower enclosure within 24 hours of assembly . Do not use caustic cleaning products or abrasive material when cleaning your shower enclosure.

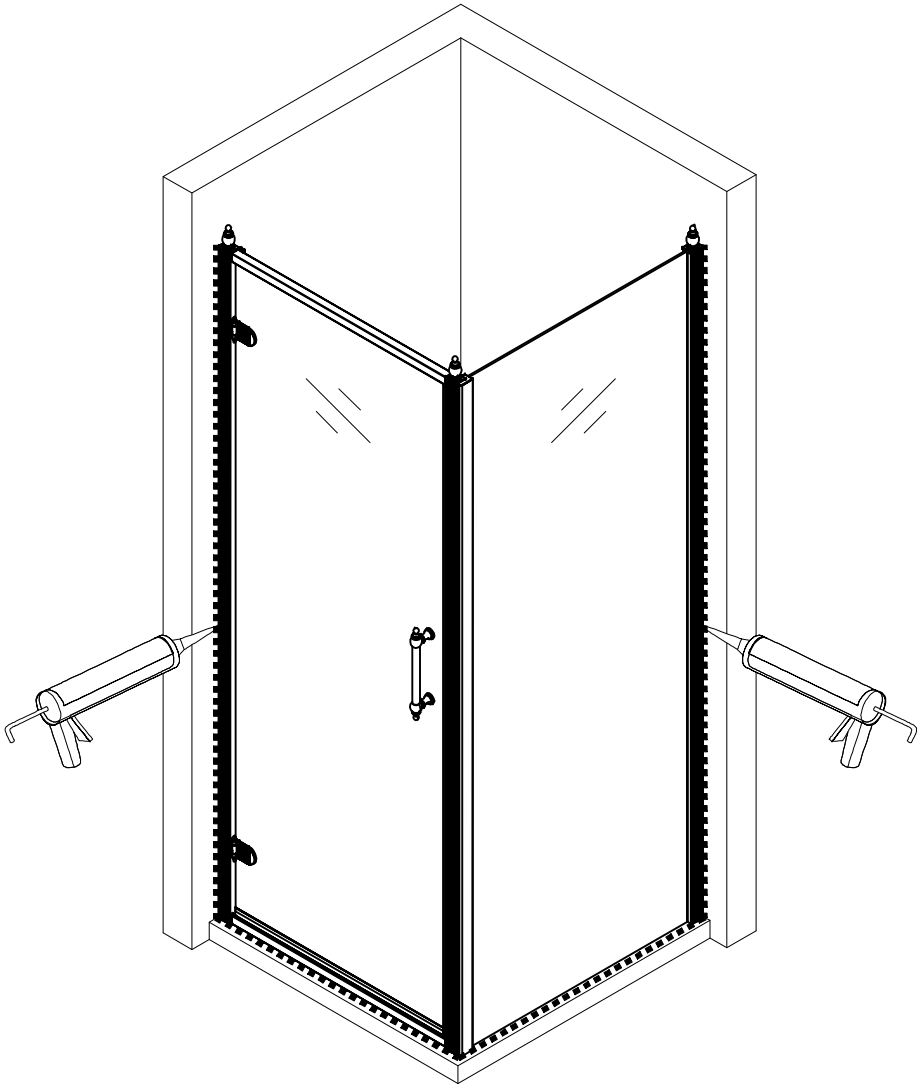

7

Care Instructions:

Do not use your shower enclosure within 24 hours of assembly . Do not use caustic cleaning products or abrasive material when cleaning your shower enclosure.

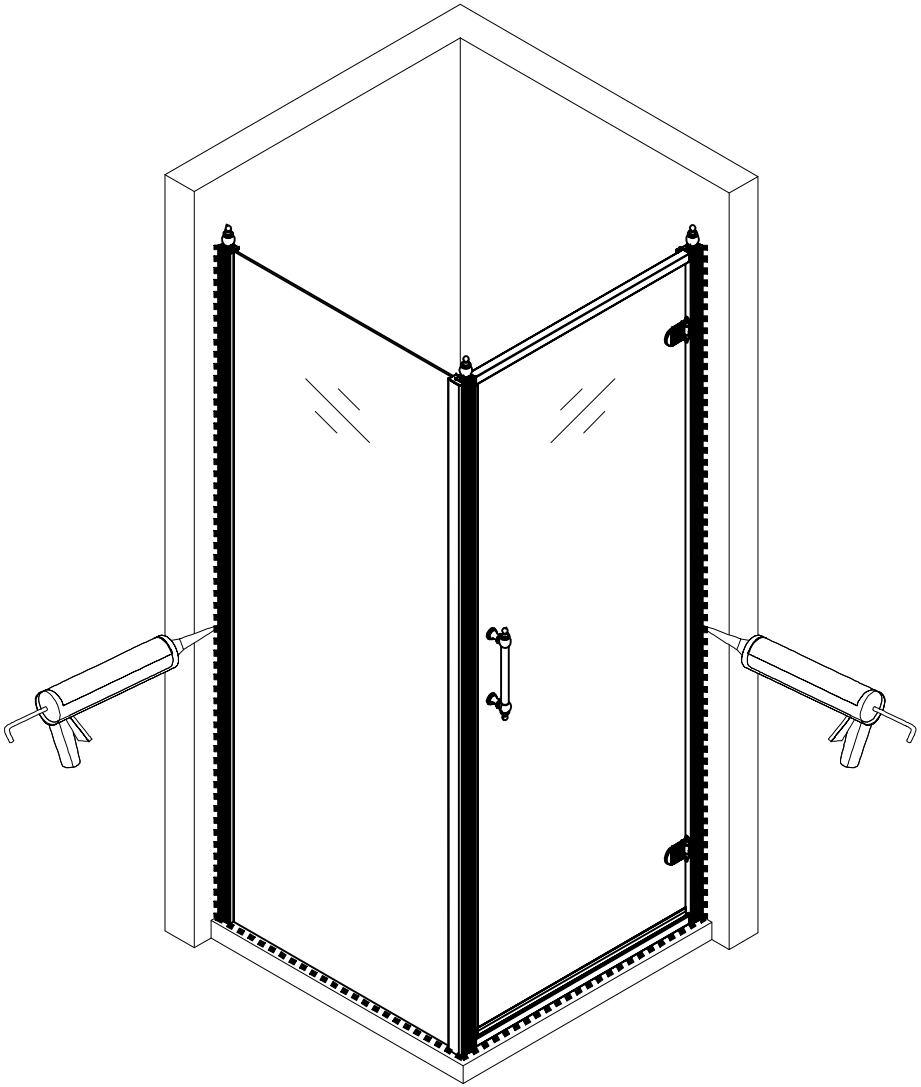

INSTALLATION MANUAL (2+)

Hinged Door + Side Panel

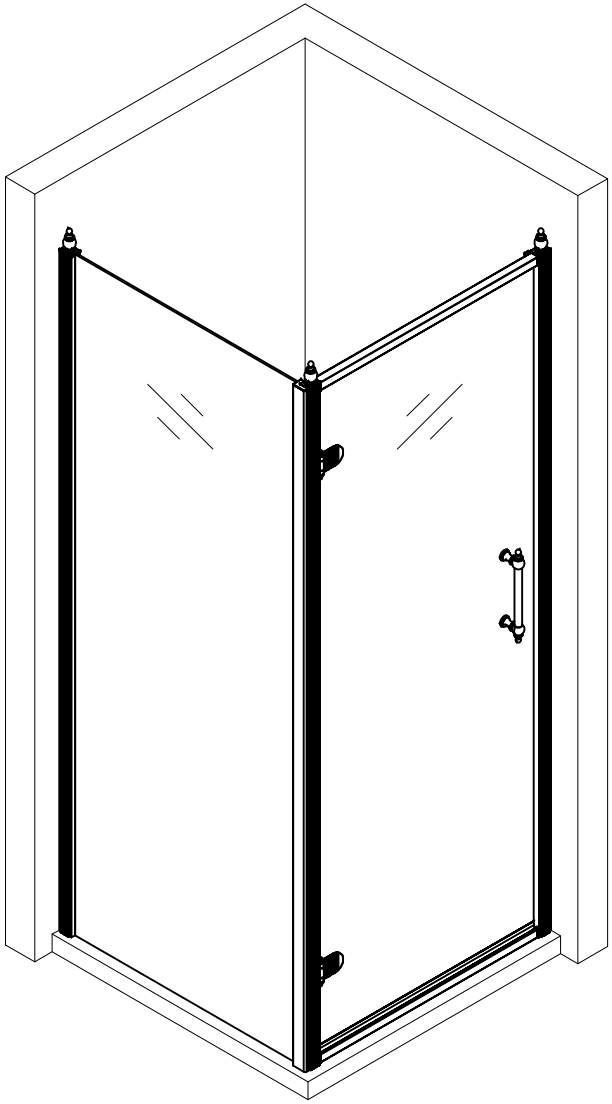

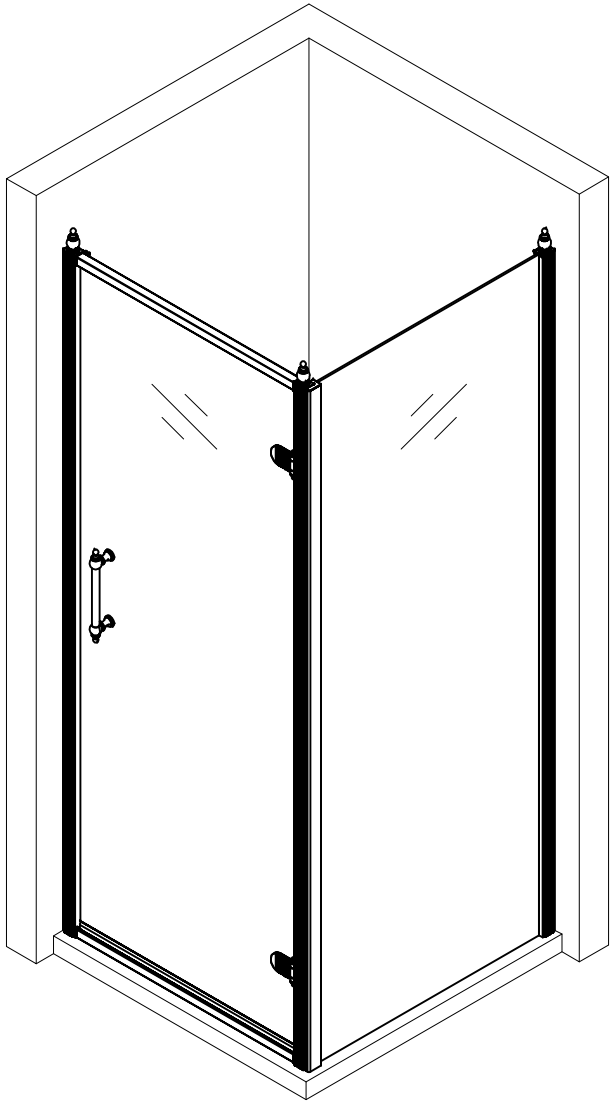

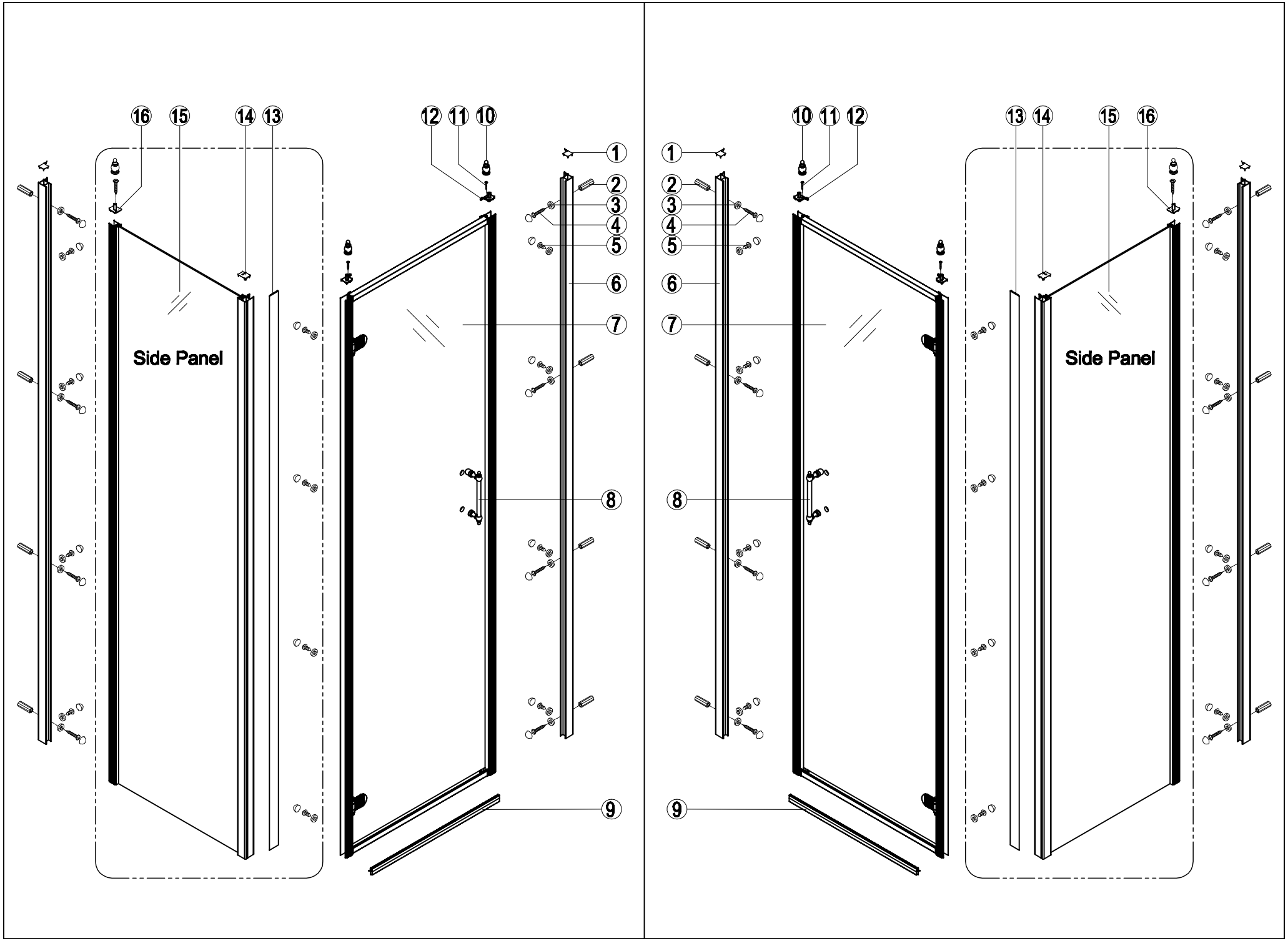
Side Panel
Side Panel
1
2
3
4
5
6
7
8
9
10
11
12
13
14
15
16

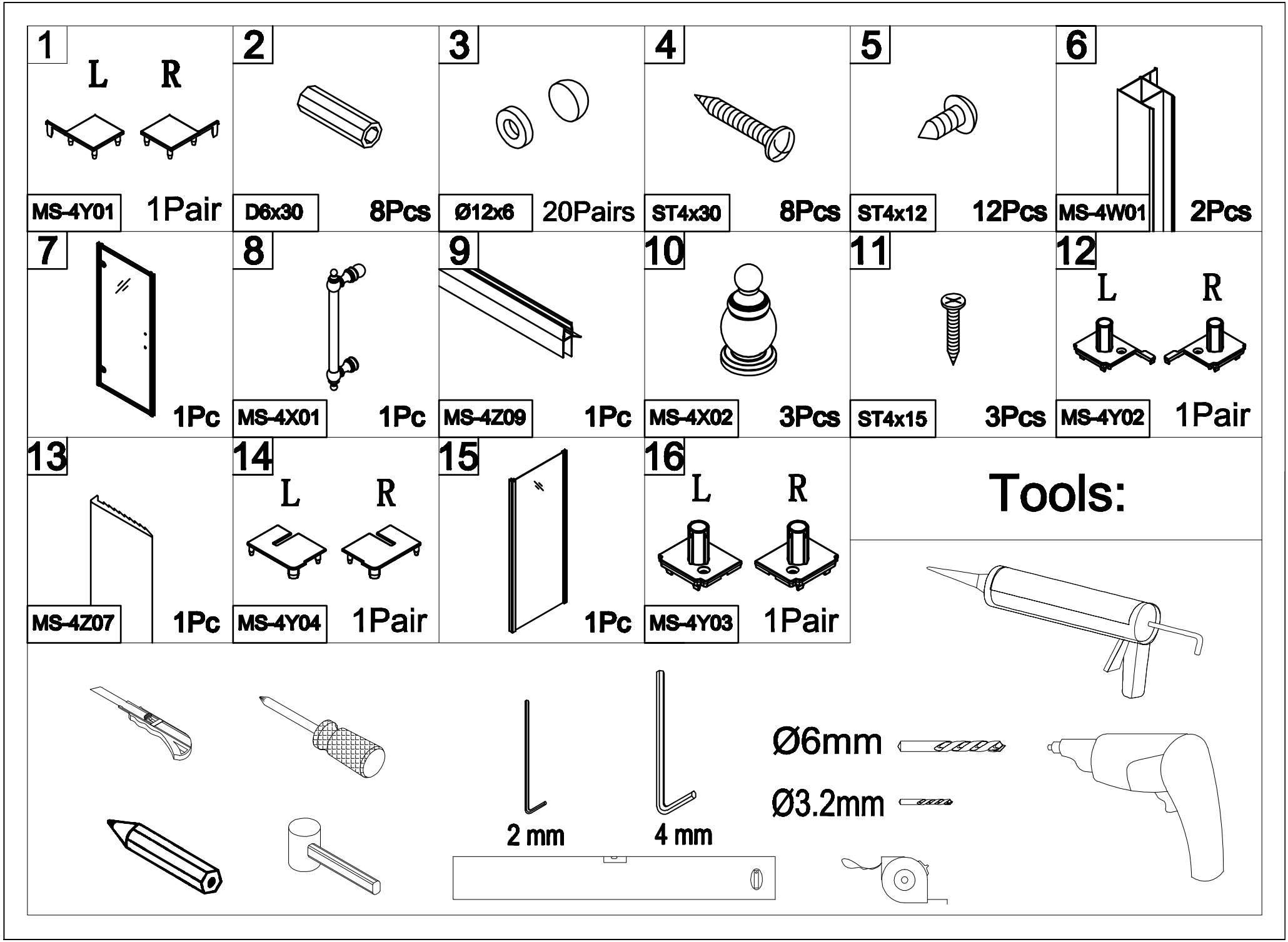
1
L
R
MS-4Y01
1Pair
2
D6x30
8Pcs
3
Ø12x6
20Pairs
4
ST4x30
8Pcs
5
ST4x12
12Pcs
6
MS-4W01
2Pcs
7
1Pc
8
MS-4X01
1Pc
9
MS-4Z09
1Pc
10
MS-4X02
3Pcs
11
ST4x15
3Pcs
12
L
R
MS-4Y02
1Pair
13
MS-4Z07
1Pc
14
L
R
MS-4Y04
1Pair
15
1Pc
16
L
R
MS-4Y03
1Pair
Tools:
Ø6mm
Ø3.2mm
2 mm
4 mm

1

	L	W		L	W
700	670-690		700	670-690	
800	770-790	**760-795**	800	770-790	760-795
900		860-895	900		860-895

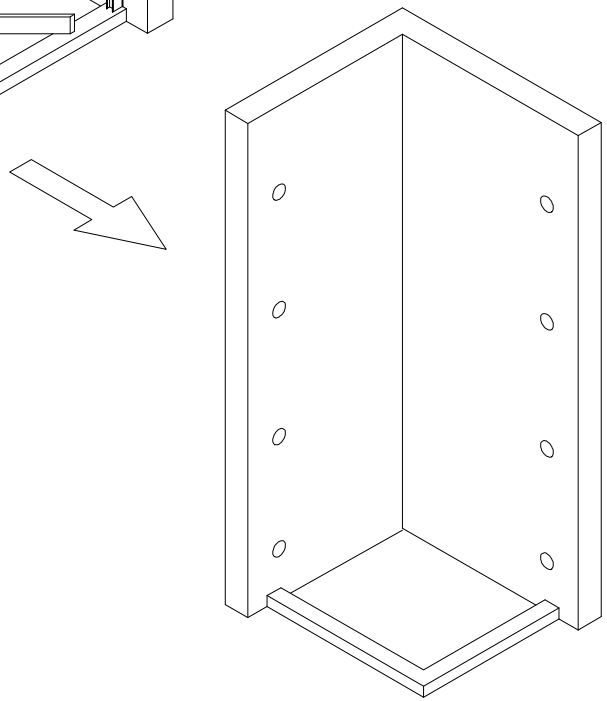

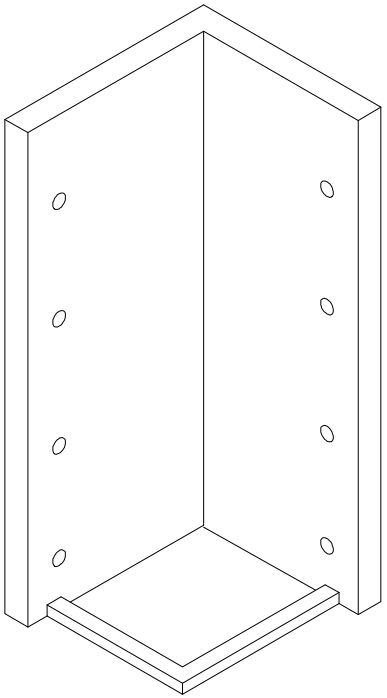

1

1-1

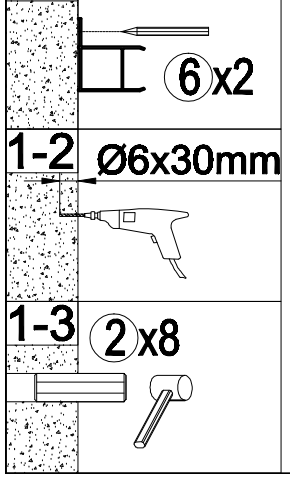

1-2

1-3

1-1

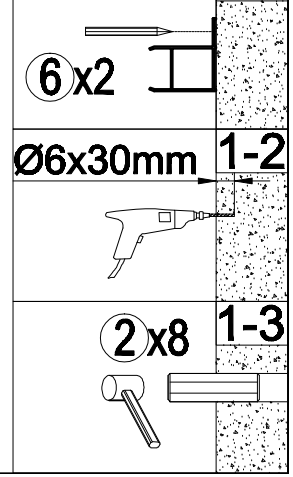

1-2

1-3

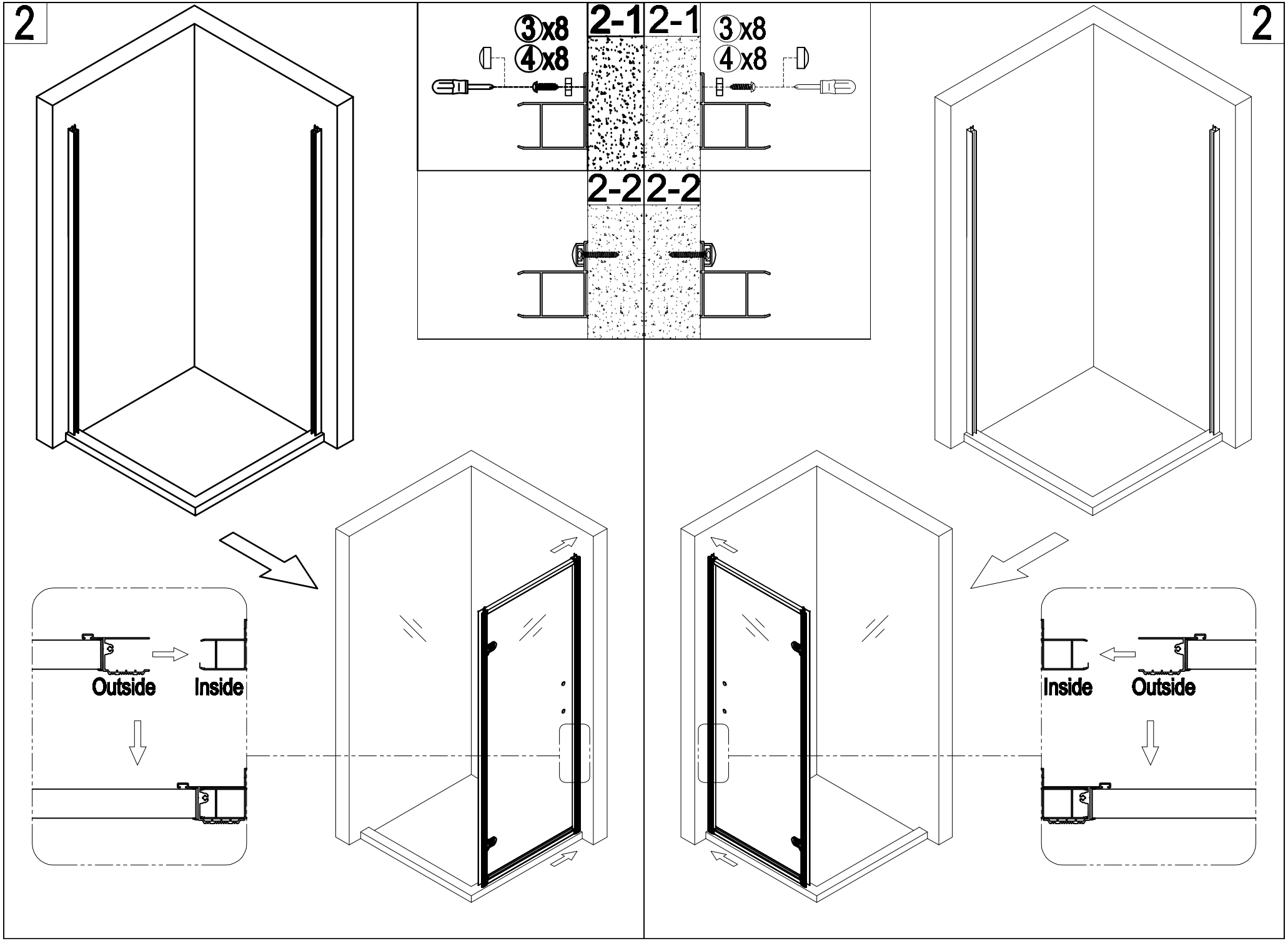
2
③x8
④x8
2-1
2-1
③x8
④x8
2-2
2-2
2
Outside
Inside
Inside
Outside

3

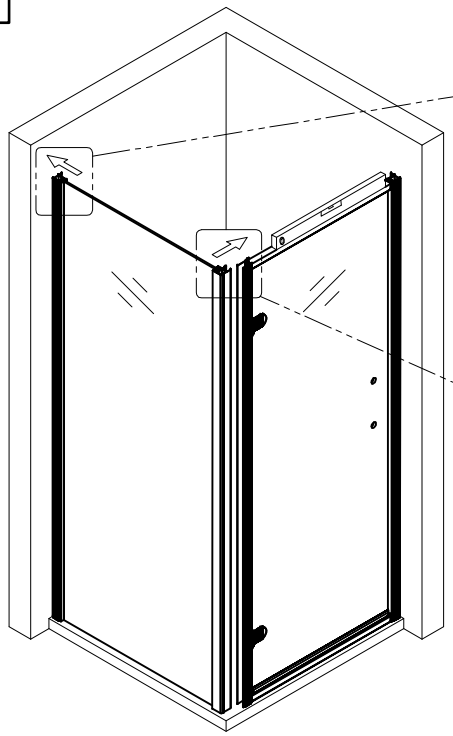

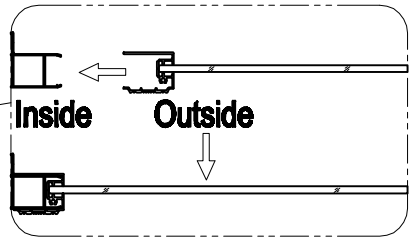
Inside
Outside

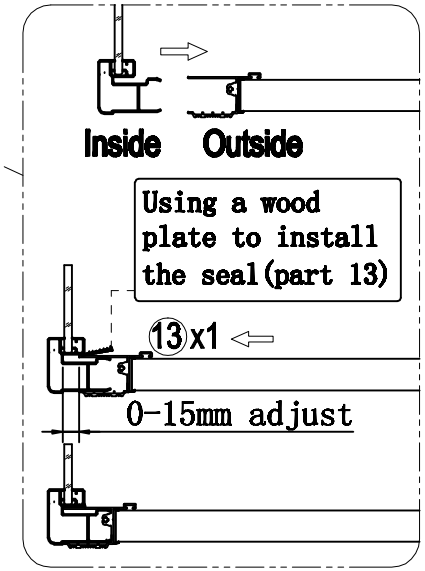
Inside
Outside
Using a wood plate to install the seal(part 13)
⑬x1
0-15mm adjust

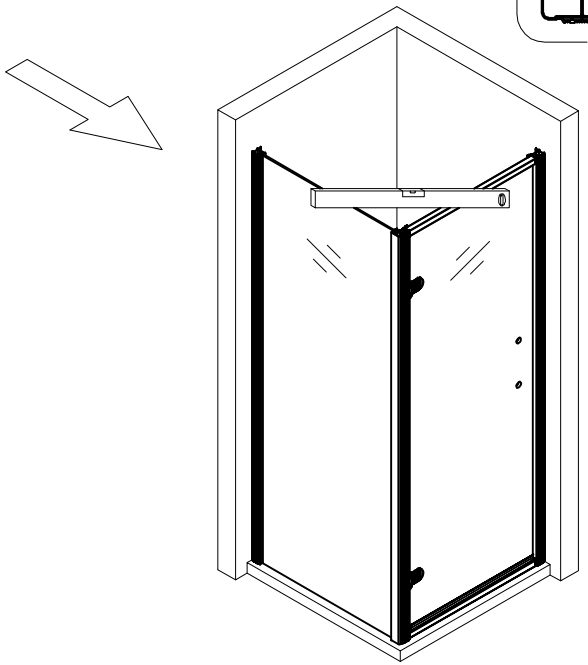

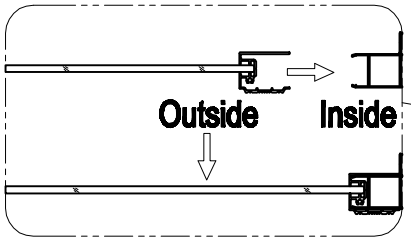
Outside
Inside

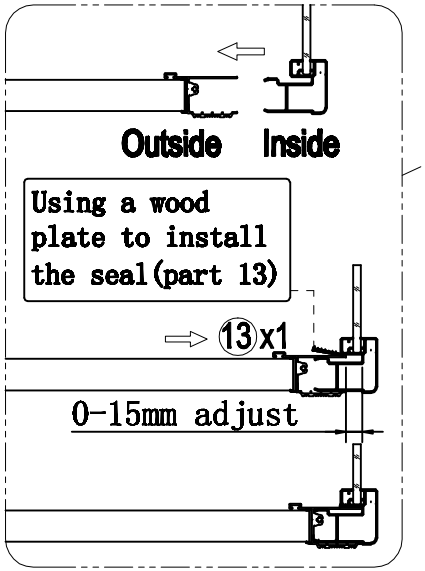
Outside
Inside
Using a wood plate to install the seal(part 13)
⑬x1
0-15mm adjust

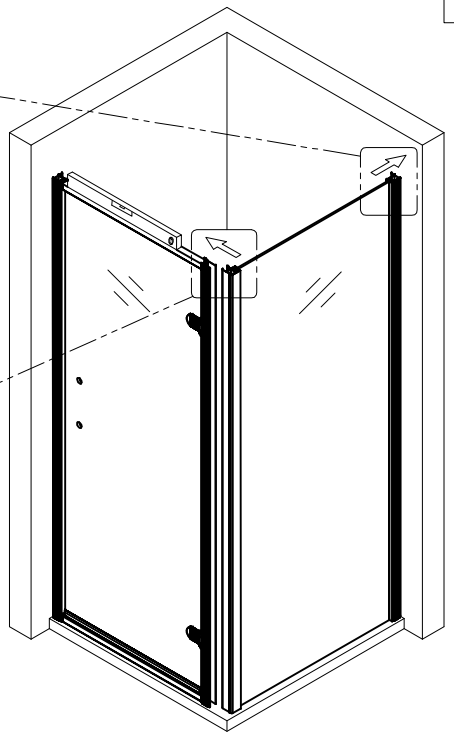

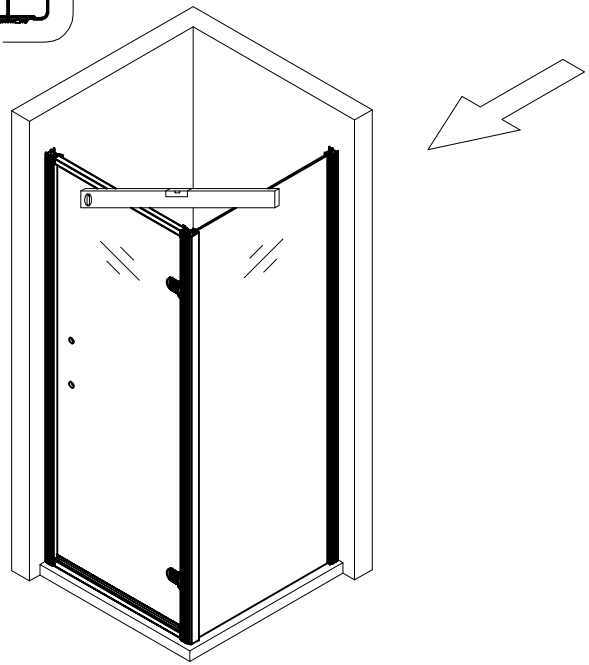

3

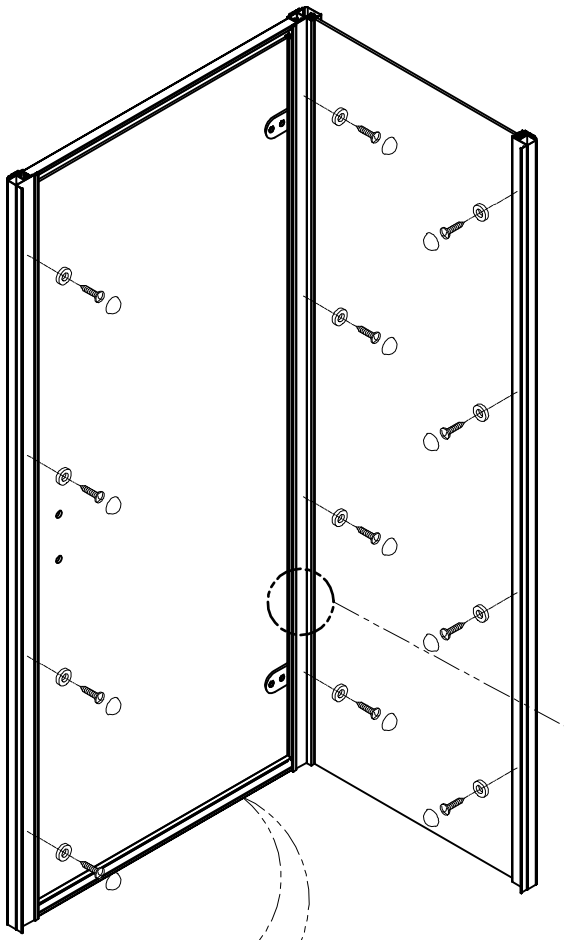

IT IS VERY IMPORTANT TO HAVE THE BOTTOM OF THE GLASS PARALLEL TO THE TRAY TOP FACE, IT MUST HAVE A 35 MM EVEN GAP ALL THE WAY ALONG.

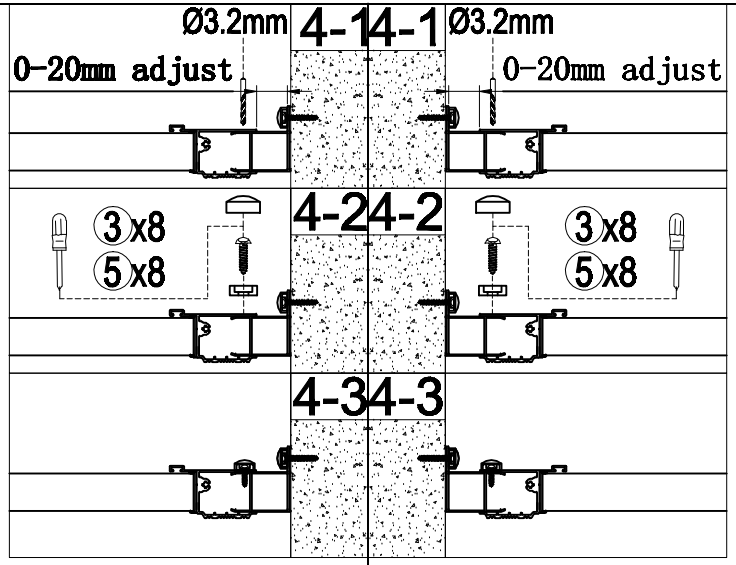

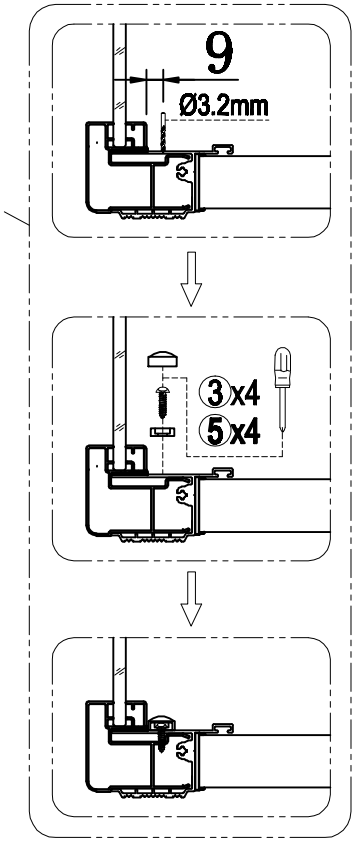

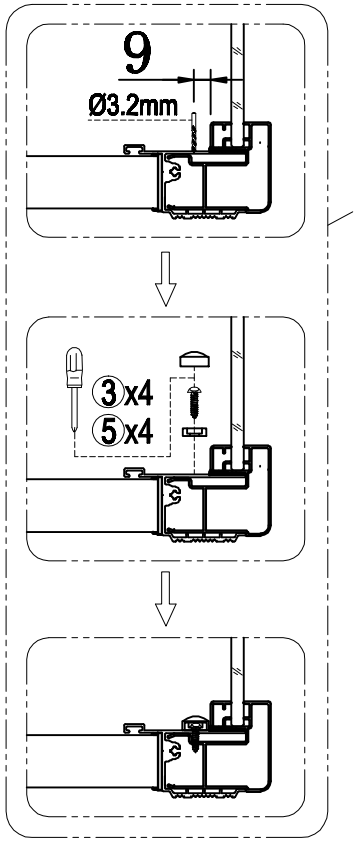

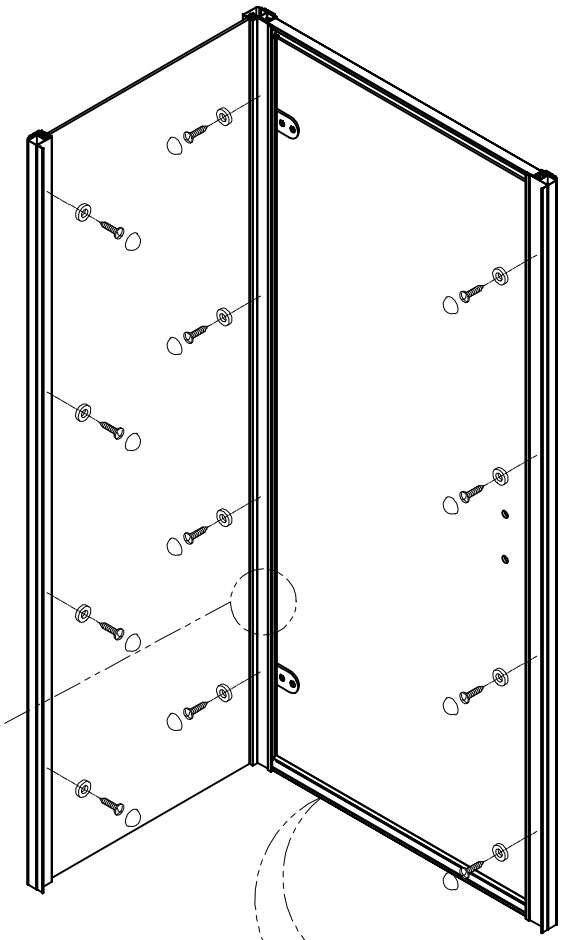

IT IS VERY IMPORTANT TO HAVE THE BOTTOM OF THE GLASS PARALLEL TO THE TRAY TOP FACE, IT MUST HAVE A 35 MM EVEN GAP ALL THE WAY ALONG.

4

5

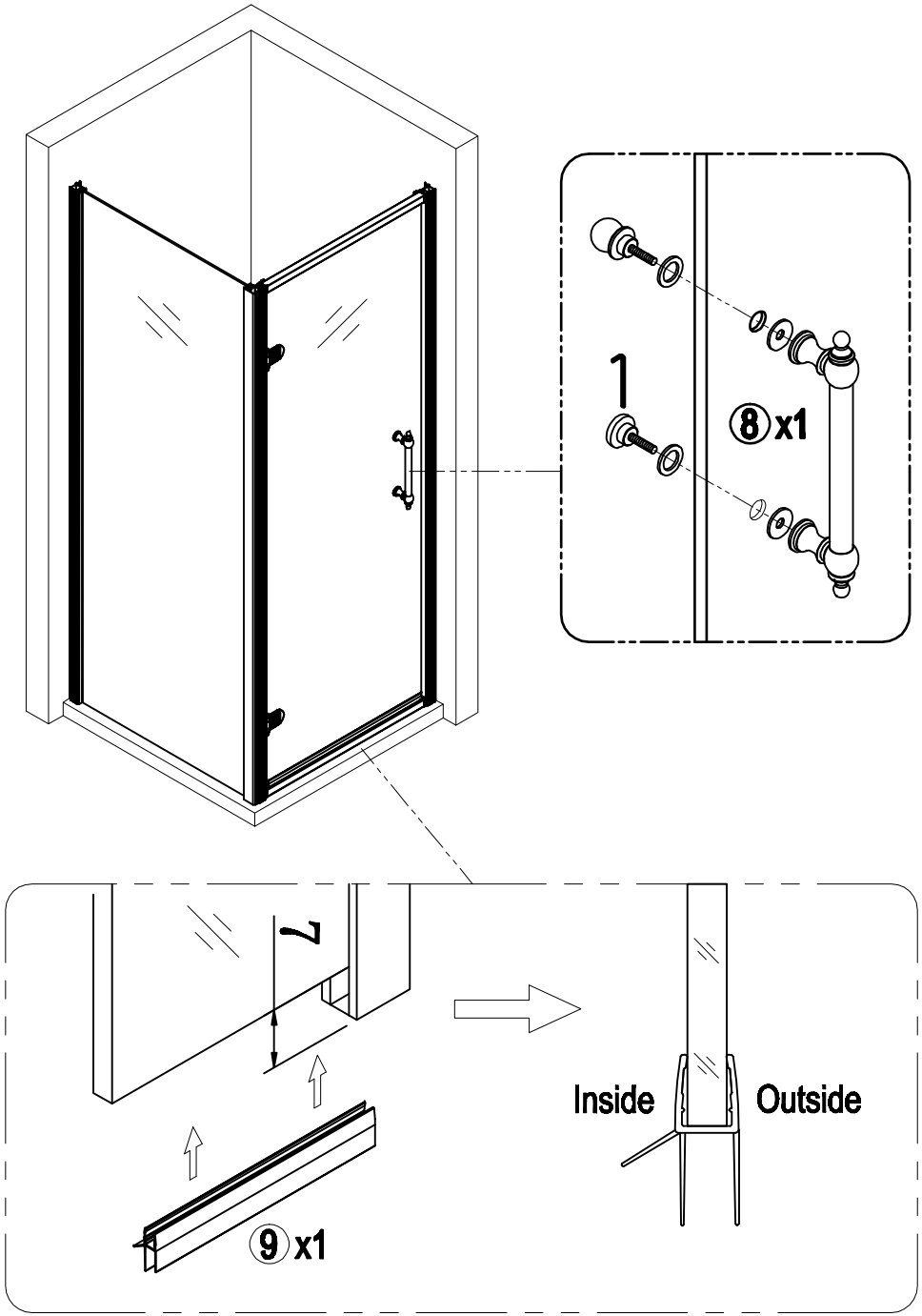

5

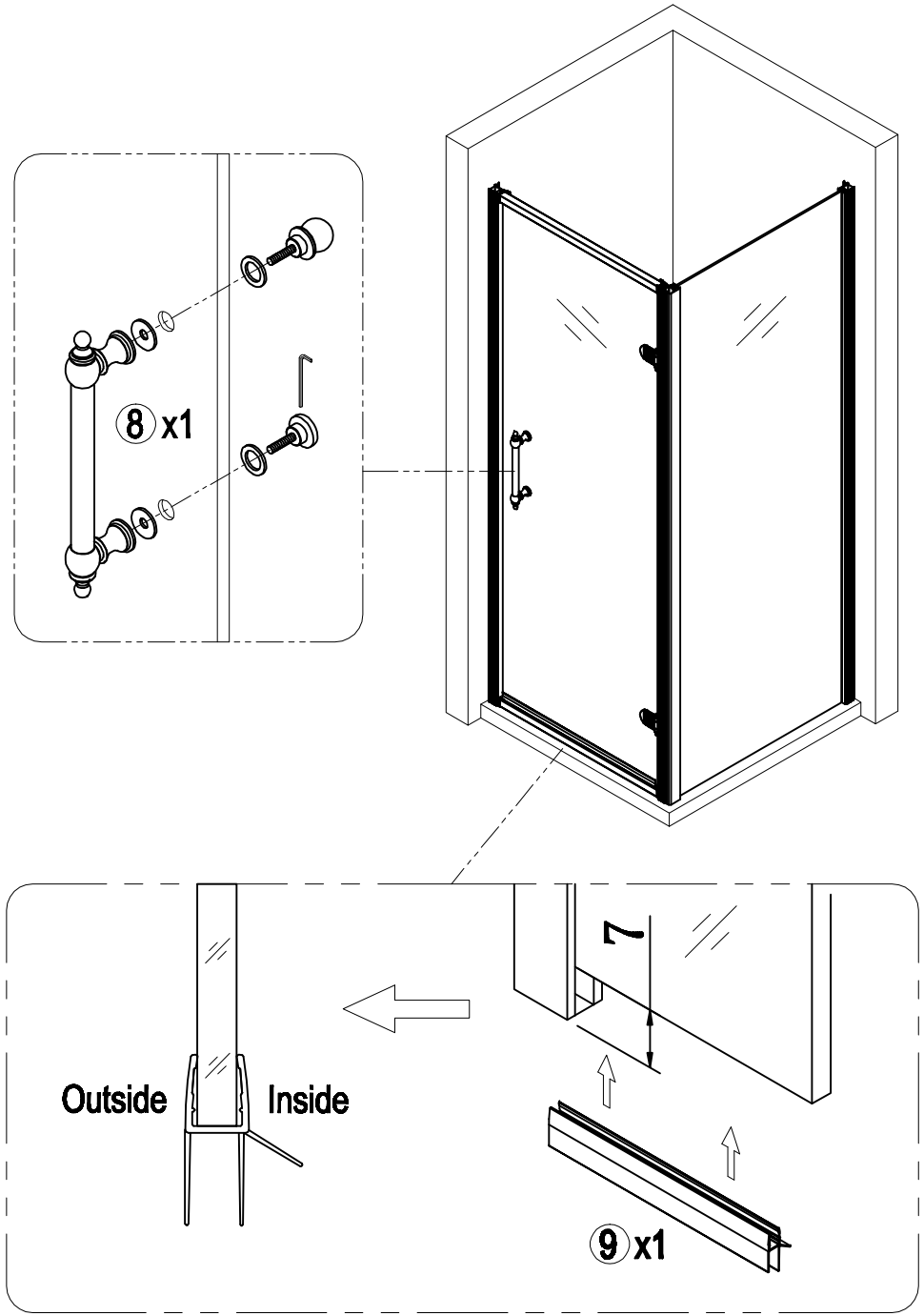

6

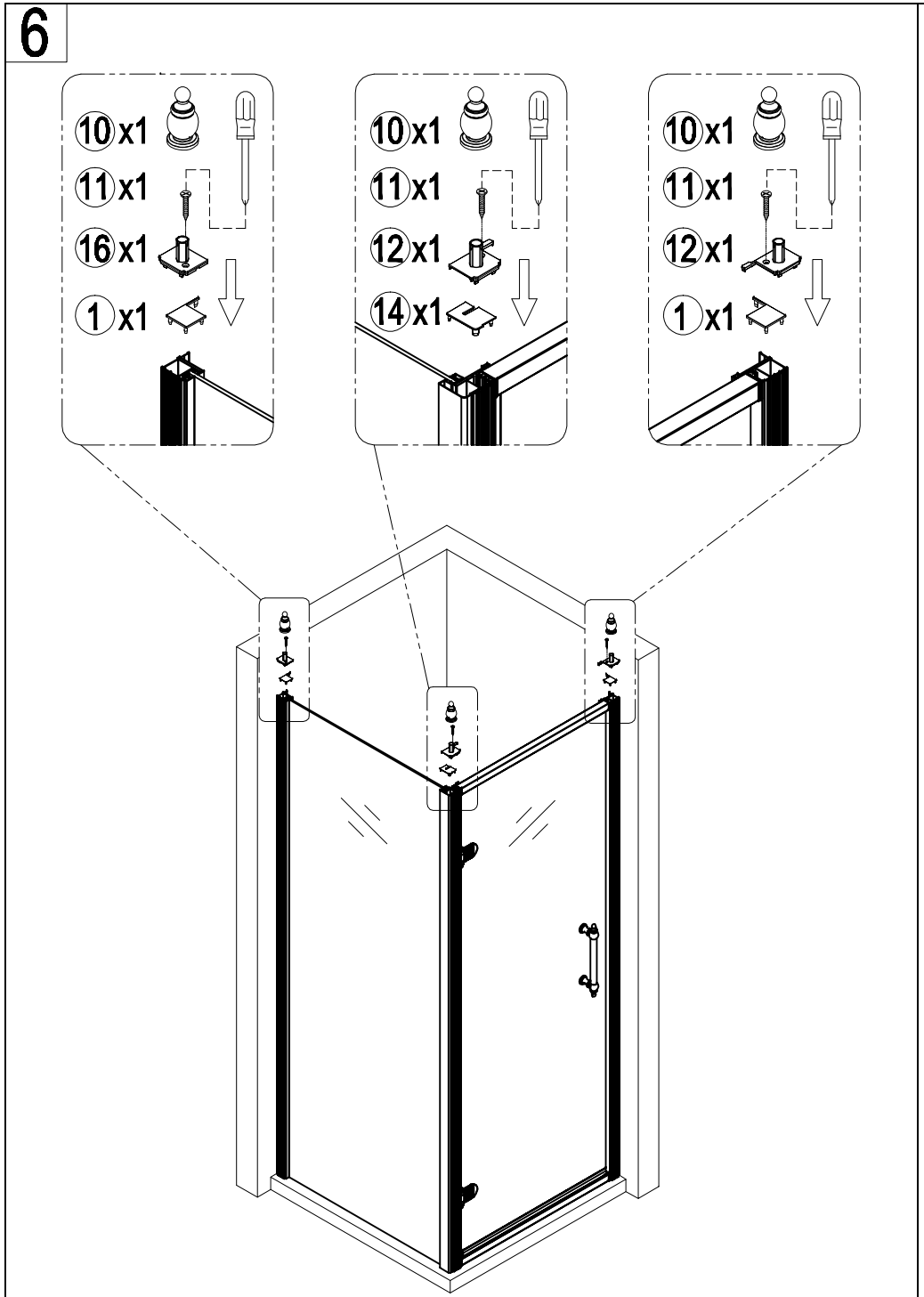
10 x1
11 x1
16 x1
1 x1
10 x1
11 x1
12 x1
14 x1
10 x1
11 x1
12 x1
1 x1

6

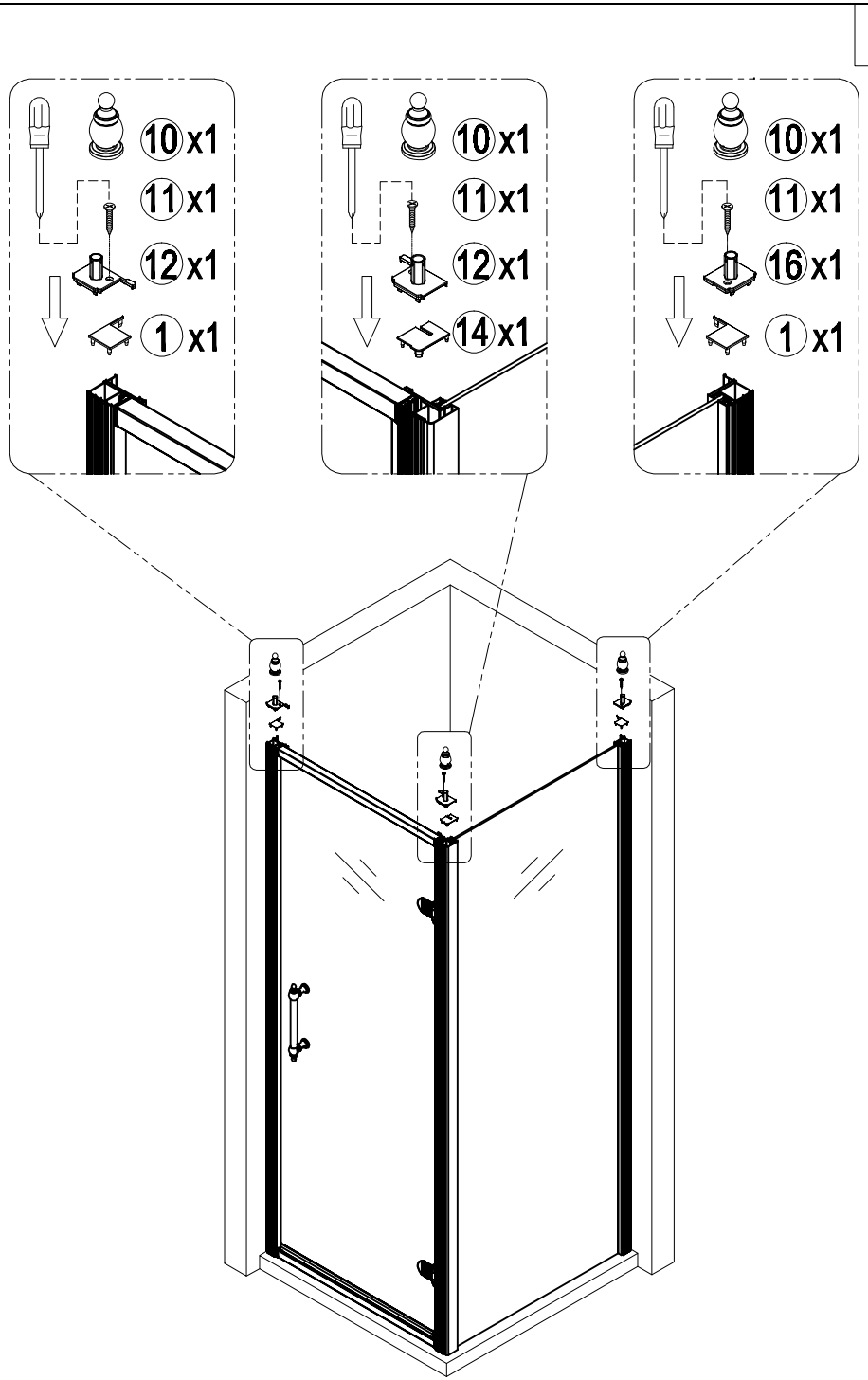
10 x1
11 x1
12 x1
1 x1
10 x1
11 x1
12 x1
14 x1
10 x1
11 x1
16 x1
1 x1

Care Instructions:

Do not use your shower enclosure within 24 hours of assembly . Do not use caustic cleaning products or abrasive material when cleaning your shower enclosure.

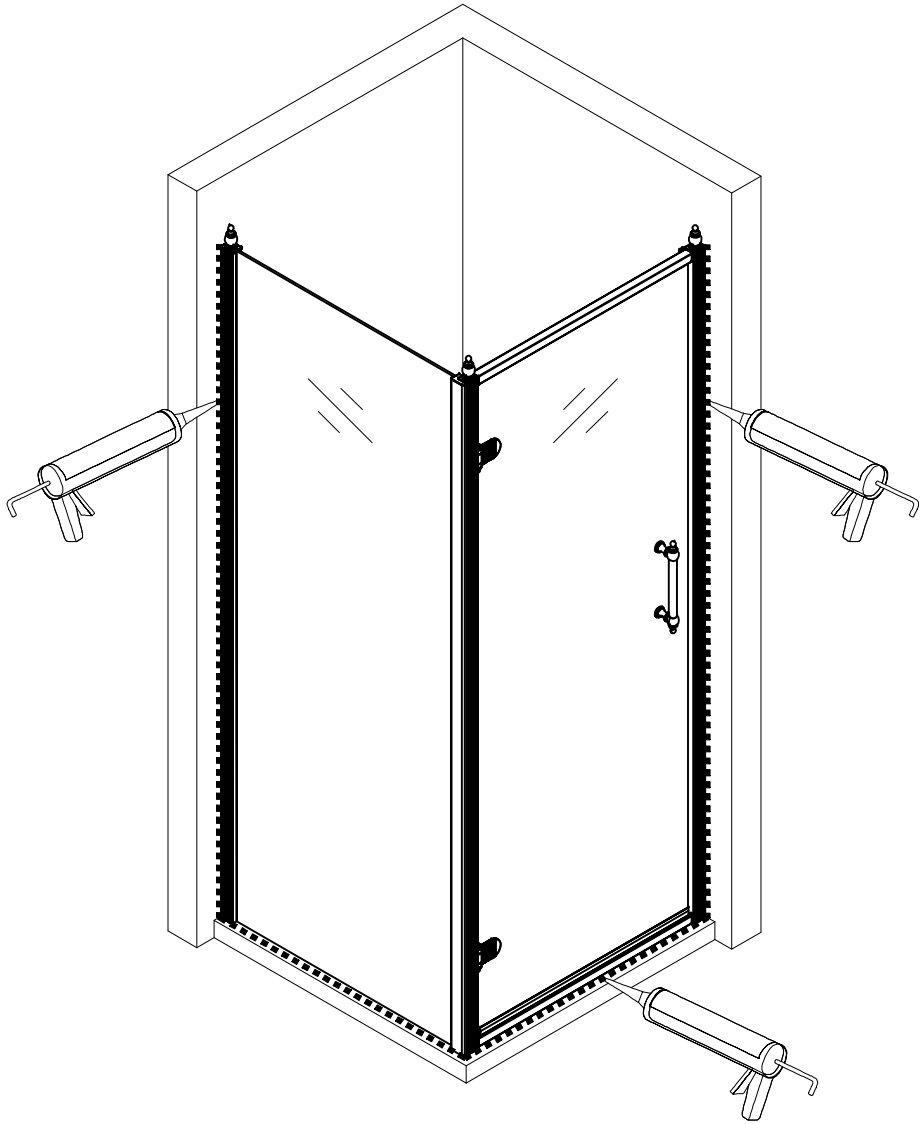

7

Care Instructions:
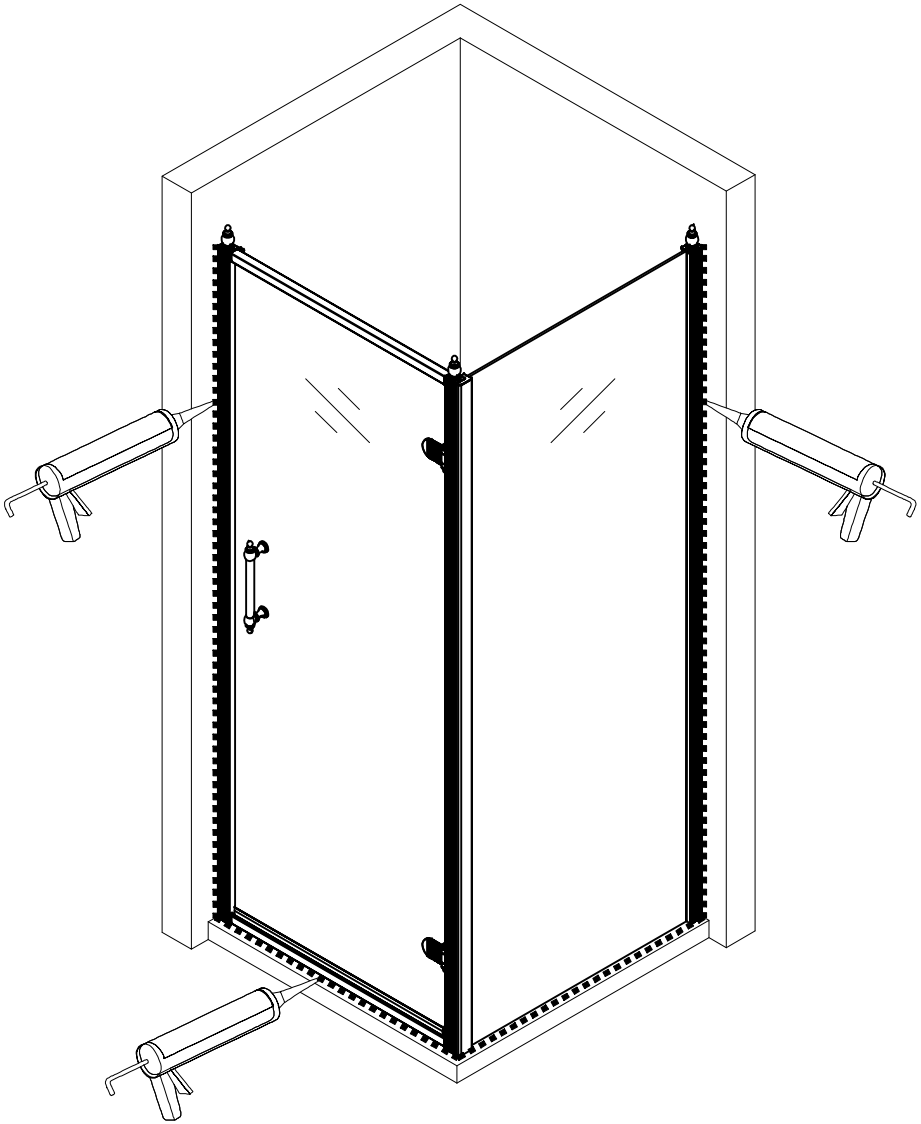
Do not use your shower enclosure within 24 hours of assembly . Do not use caustic cleaning products or abrasive material when cleaning your shower enclosure.