INSTALLATION MANUAL

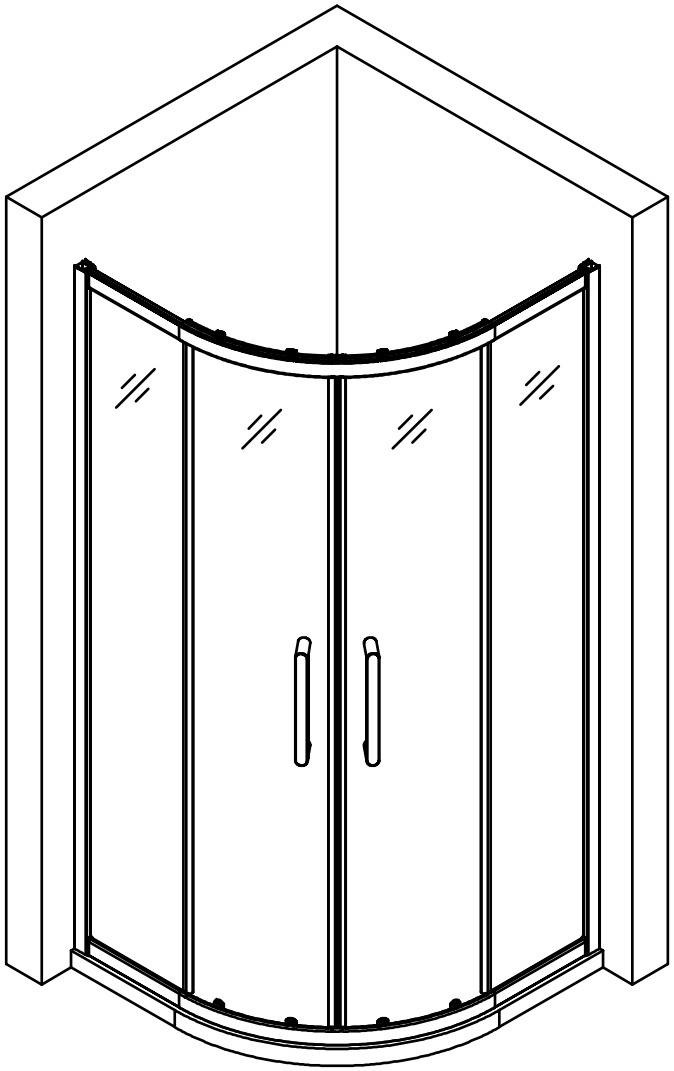

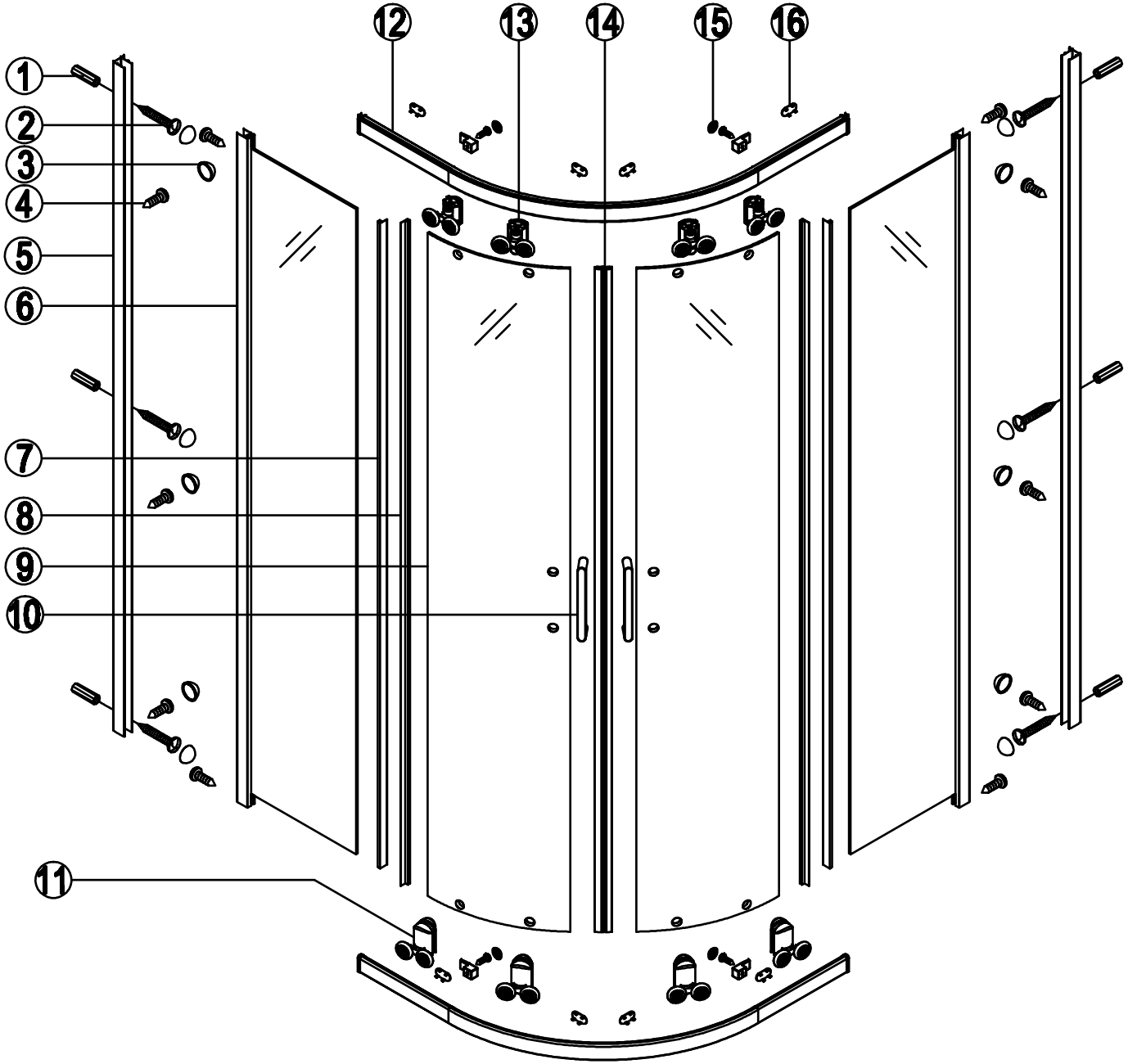
1
2
3
4
5
6
7
8
9
10
11
12
13
14
15
16

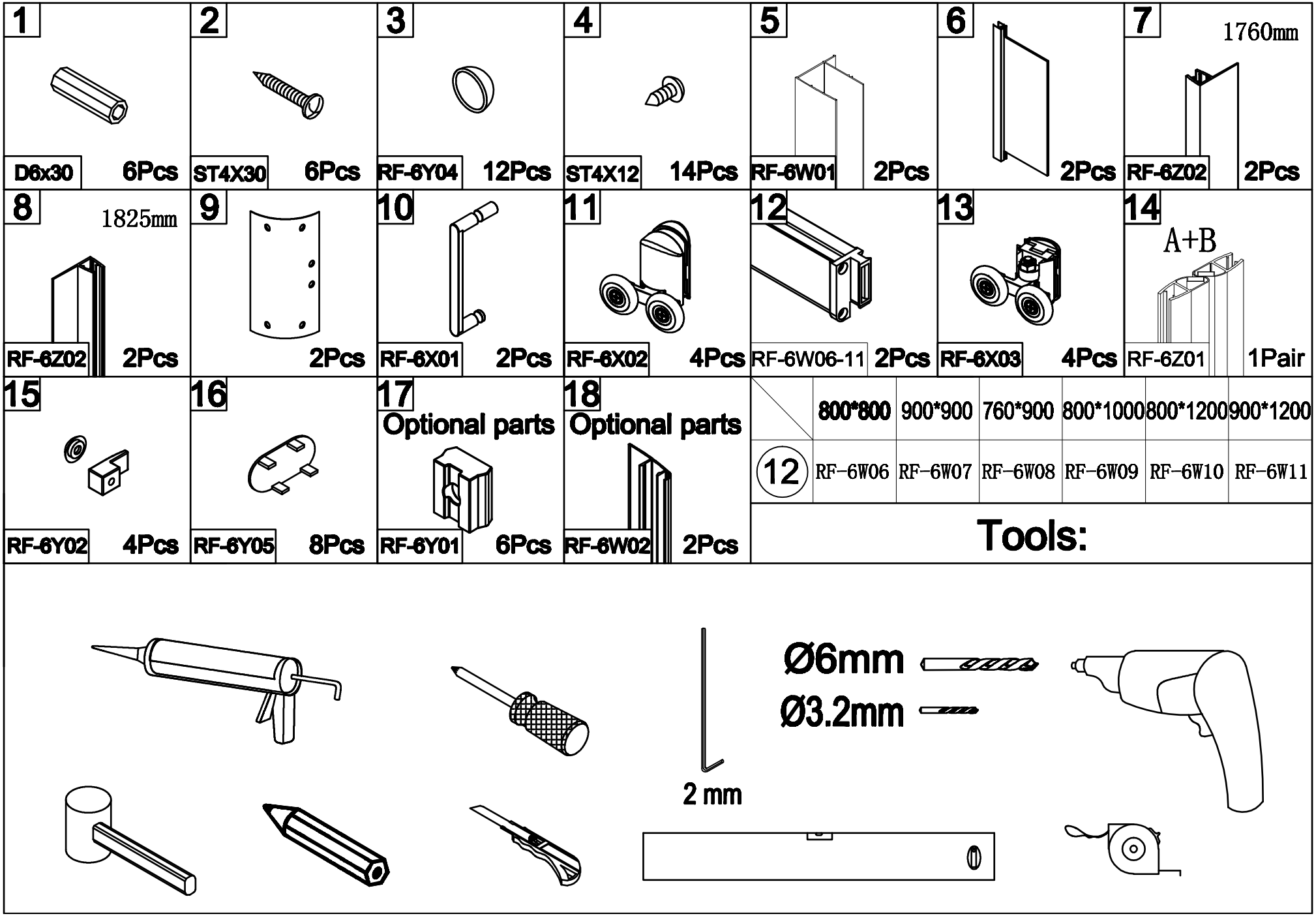
1
D6x30
6Pcs
2
ST4X30
6Pcs
3
RF-6Y04
12Pcs
4
ST4X12
14Pcs
5
RF-6W01
2Pcs
6
2Pcs
7
1760mm
RF-6Z02
2Pcs
8
1825mm
RF-6Z02
2Pcs
9
2Pcs
10
RF-6X01
2Pcs
11
RF-6X02
4Pcs
12
RF-6W06-11
2Pcs
13
RF-6X03
4Pcs
14
A+B
RF-6Z01
1Pair
15
RF-6Y02
4Pcs
16
RF-6Y05
8Pcs
17
Optional parts
RF-6Y01
6Pcs
18
Optional parts
RF-6W02
2Pcs
800*800
900*900
760*900
800*1000
800*1200
900*1200
12
RF-6W06
RF-6W07
RF-6W08
RF-6W09
RF-6W10
RF-6W11
Tools:
Ø6mm
Ø3.2mm
2 mm

1

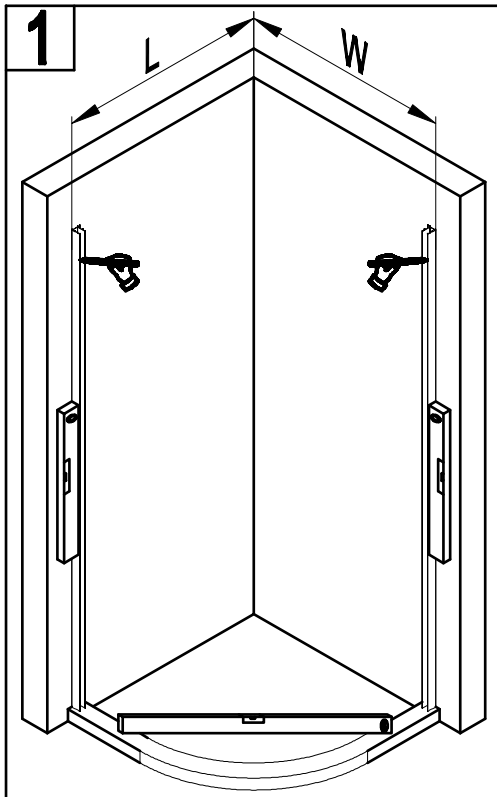

	L	W
800*800	760-780	760-780
900*900	860-880	860-880
760*900	720-740	860-880
800*1000	760-780	960-980
800*1200	760-780	1160-1180
900*1200	860-880	1160-1180

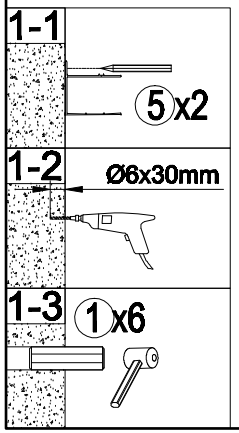

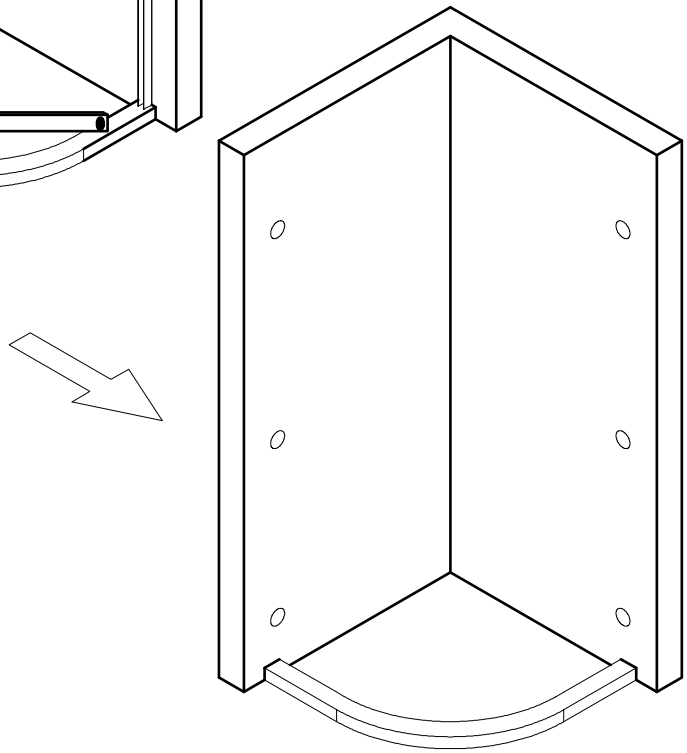

2

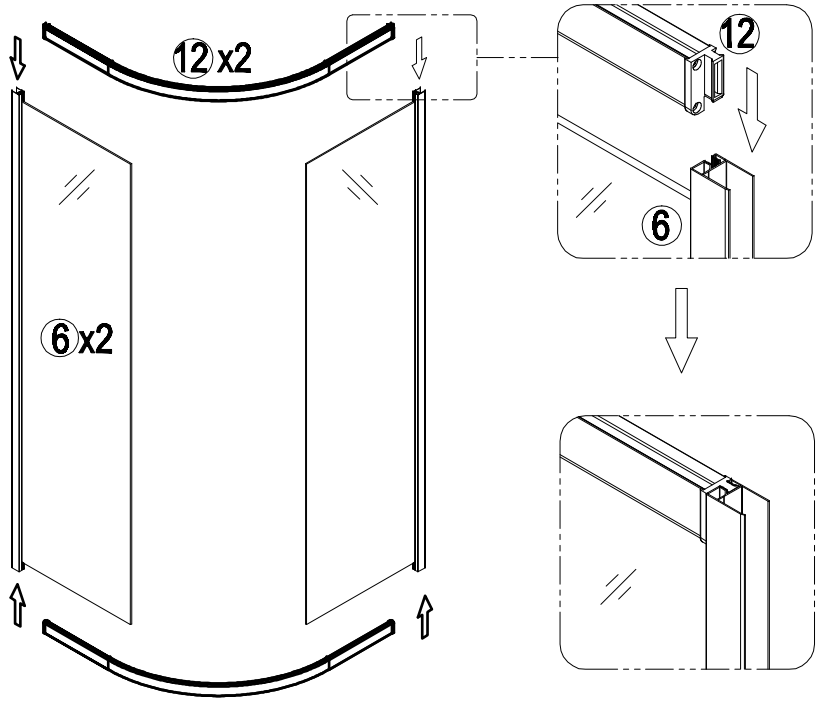

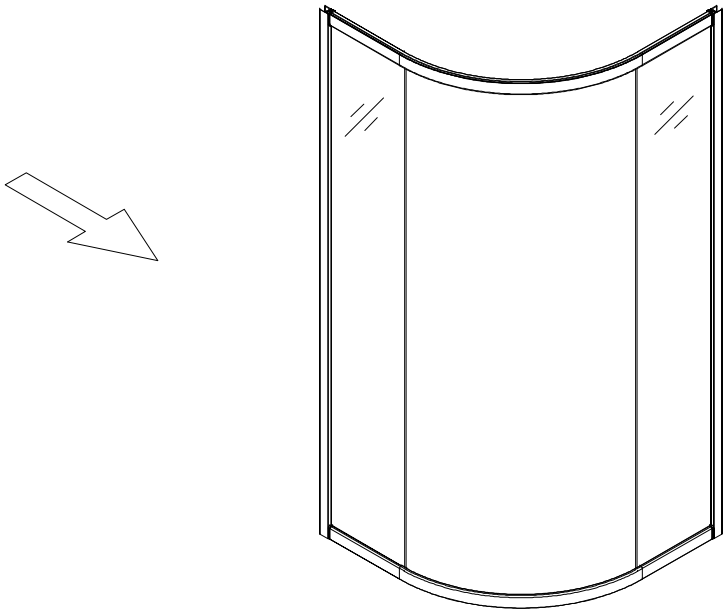

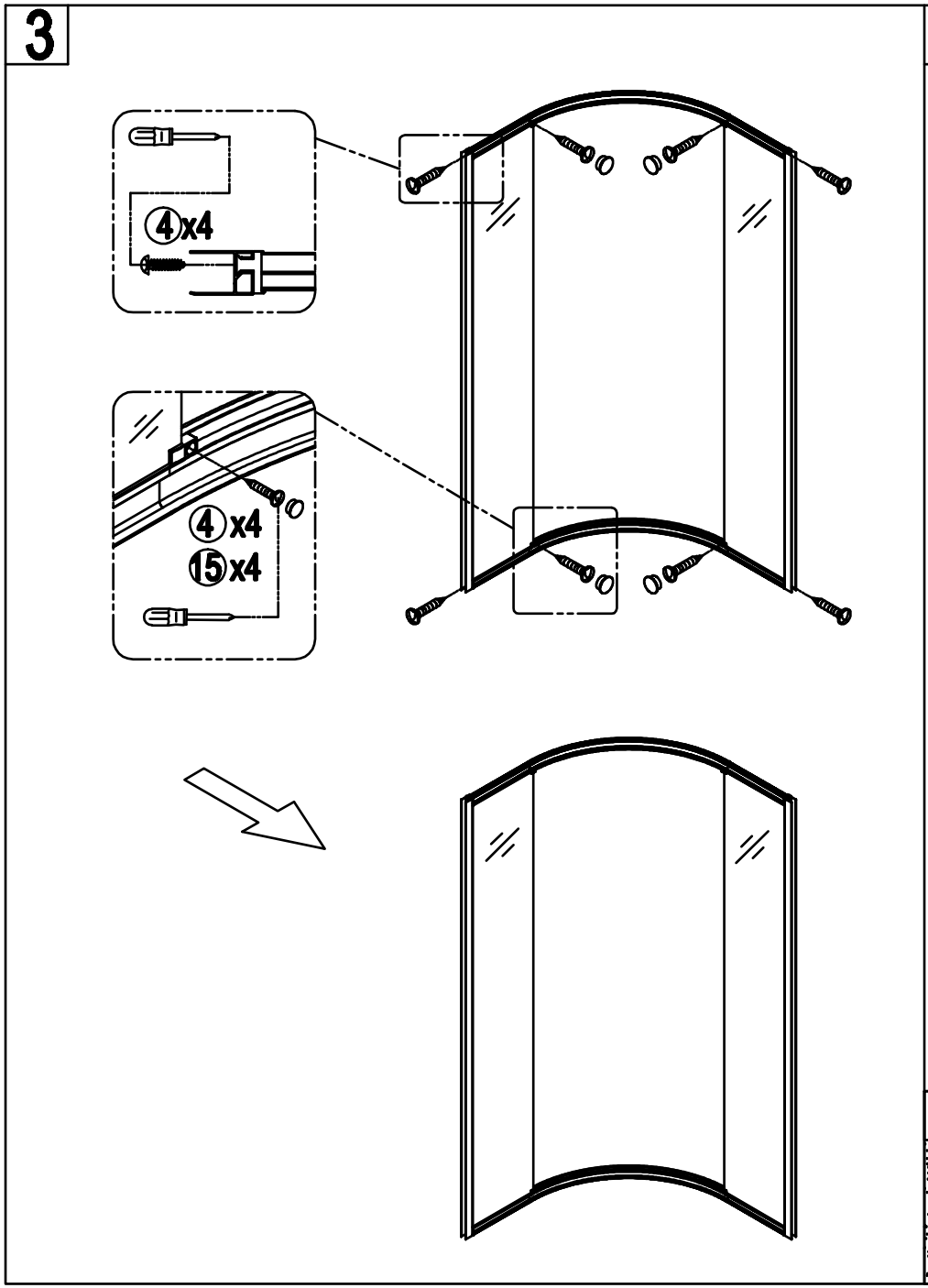
3
④x4
④x4
⑮x4

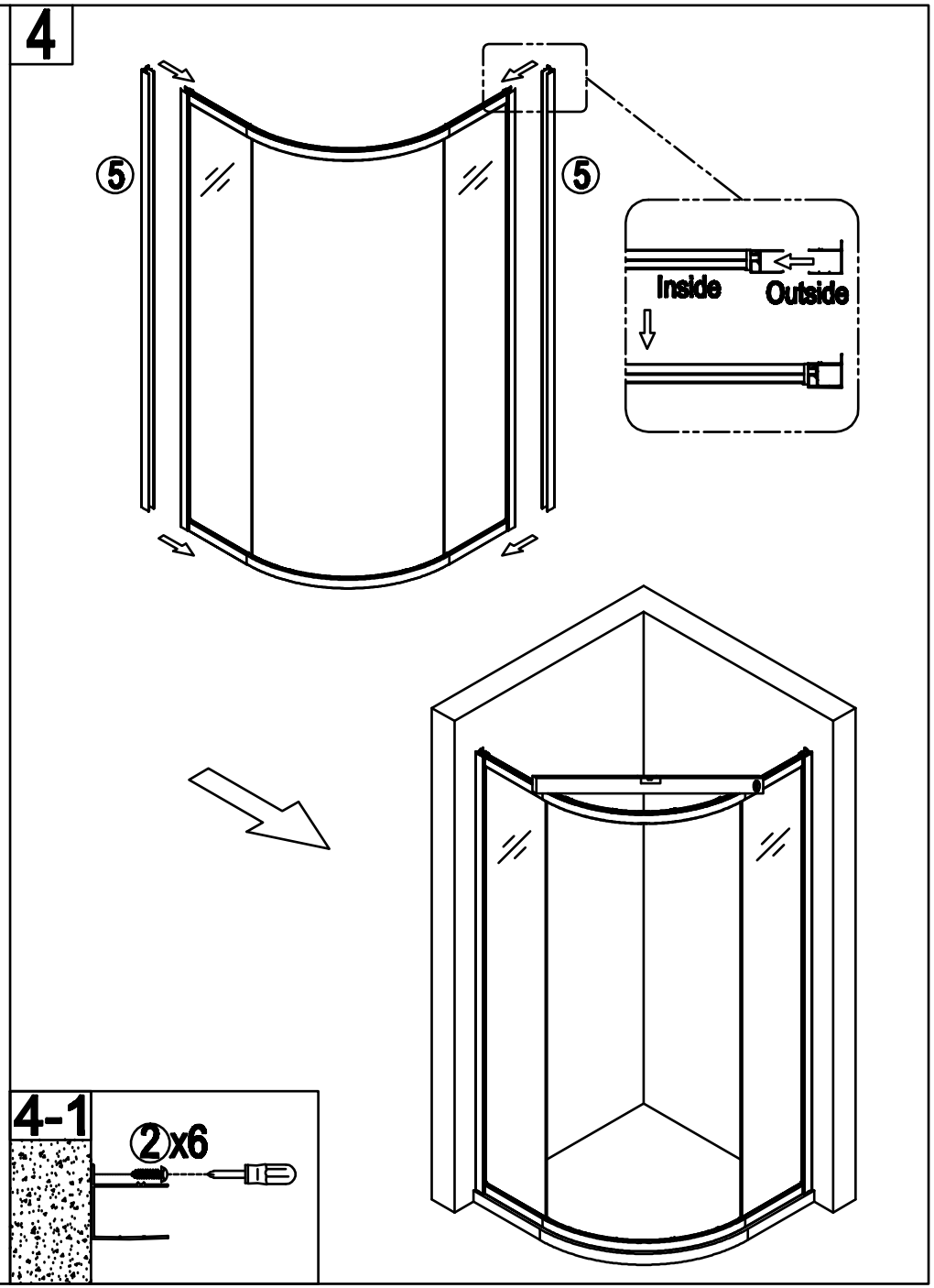
4
⑤
⑤
Inside
Outside
4-1
②x6

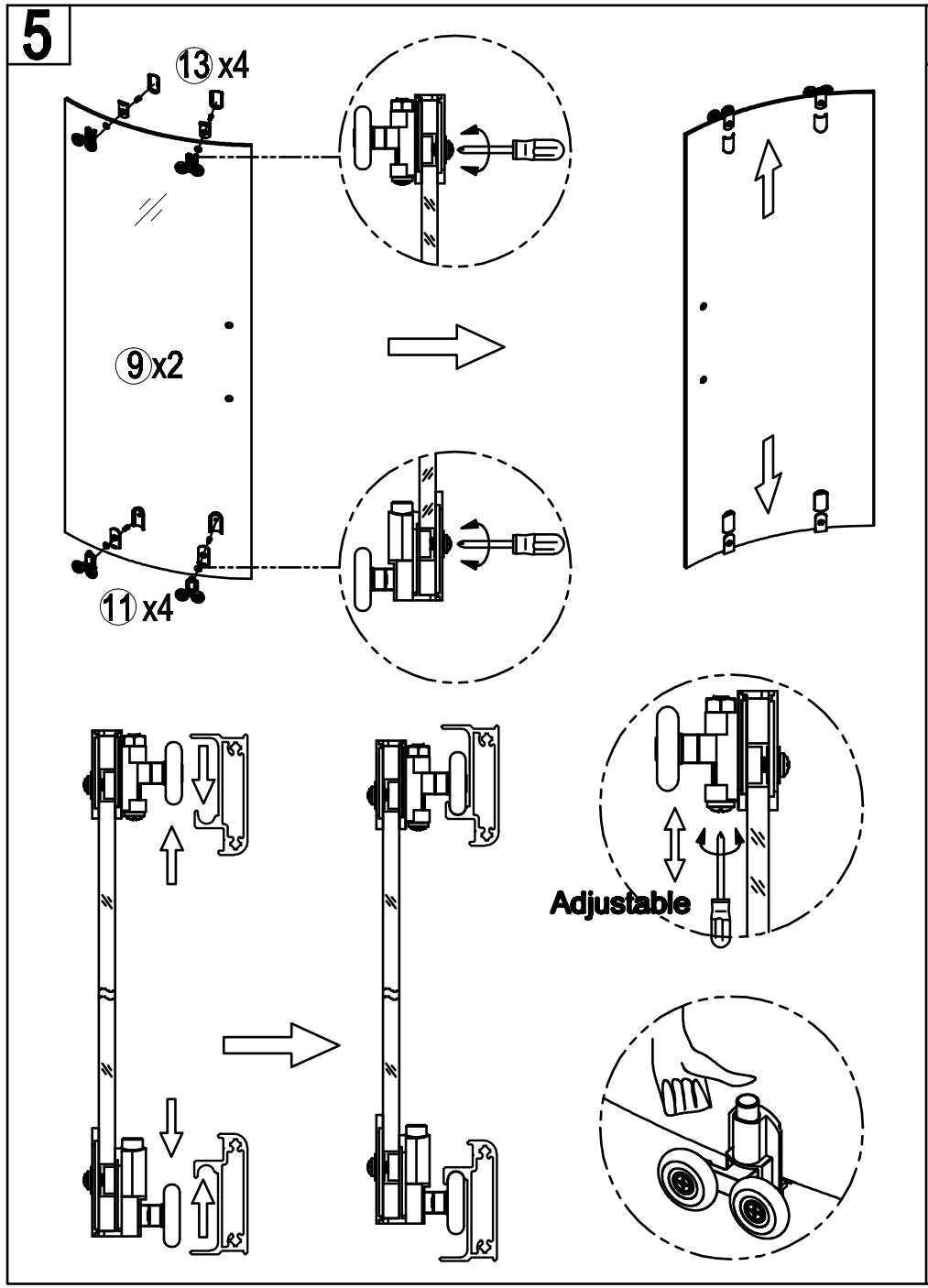
5
⑬x4
⑨x2
⑪x4
Adjustable

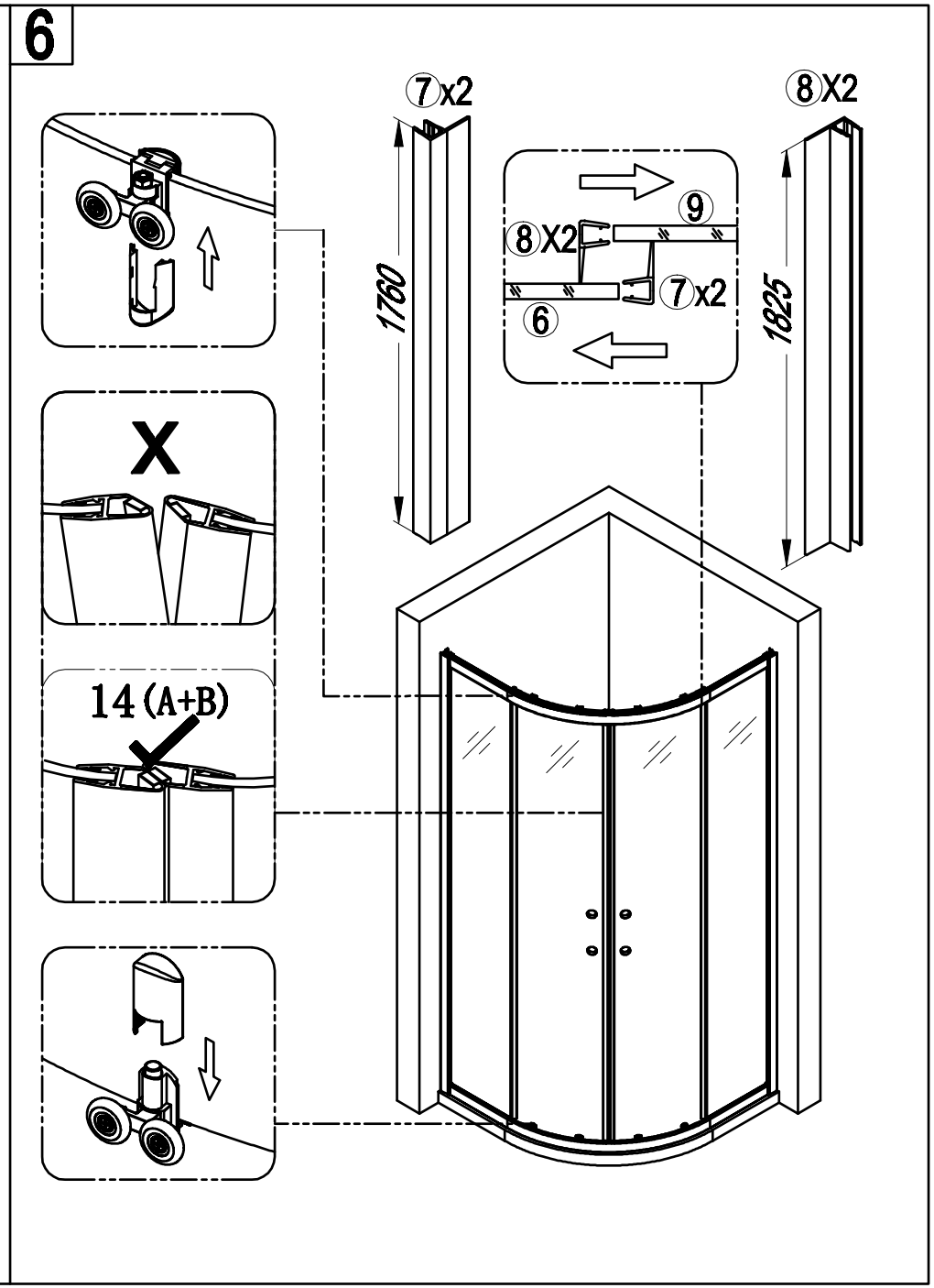
6
⑦x2
⑧X2
1760
1825
⑨
⑧X2
⑦x2
⑥
X
14(A+B)

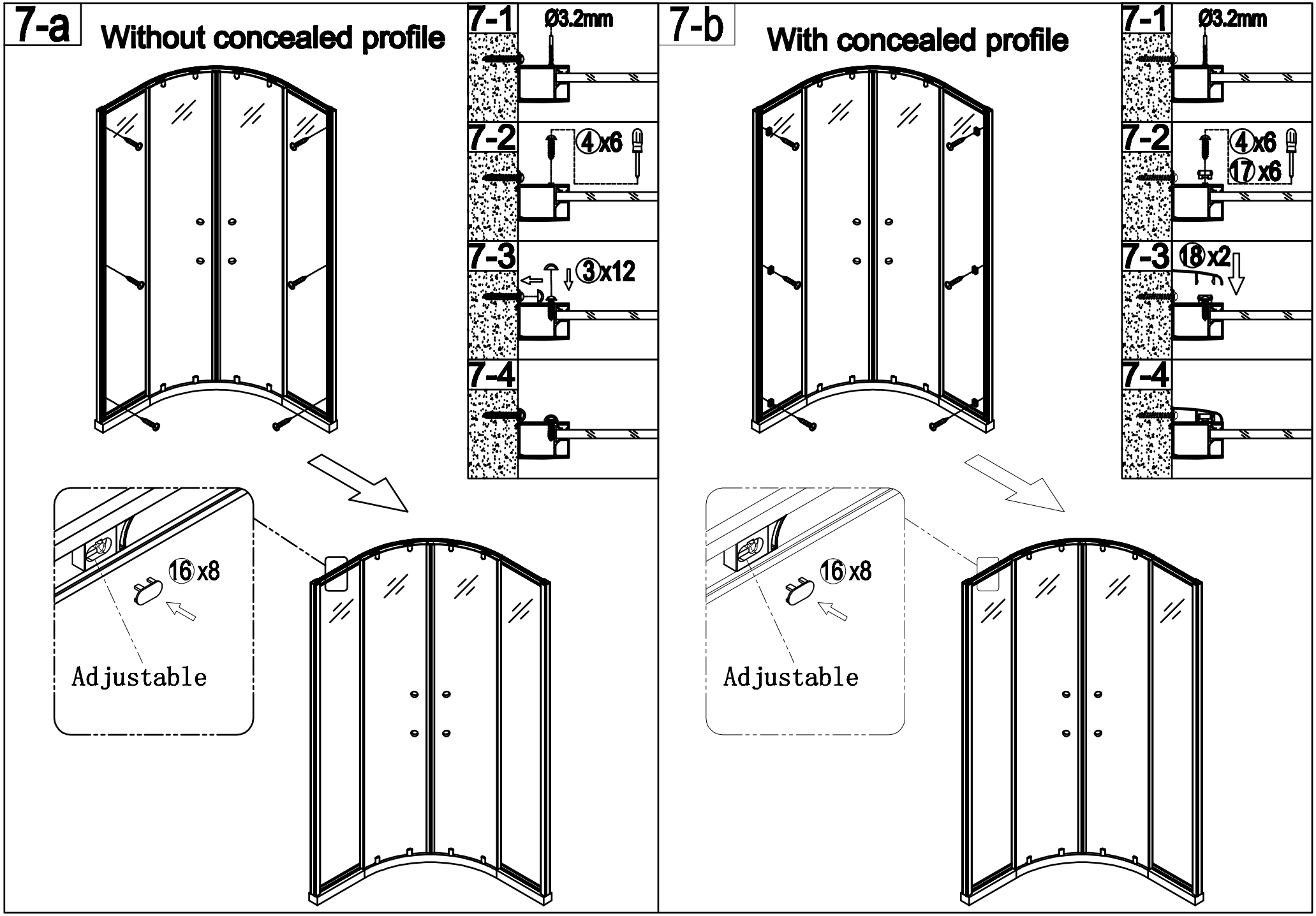
7-a
Without concealed profile
7-1
Ø3.2mm
7-2
④x6
7-3
③x12
7-4
⑯x8
Adjustable
7-b
With concealed profile
7-1
Ø3.2mm
7-2
④x6
⑰x6
7-3
⑱x2
7-4
⑯x8
Adjustable

8

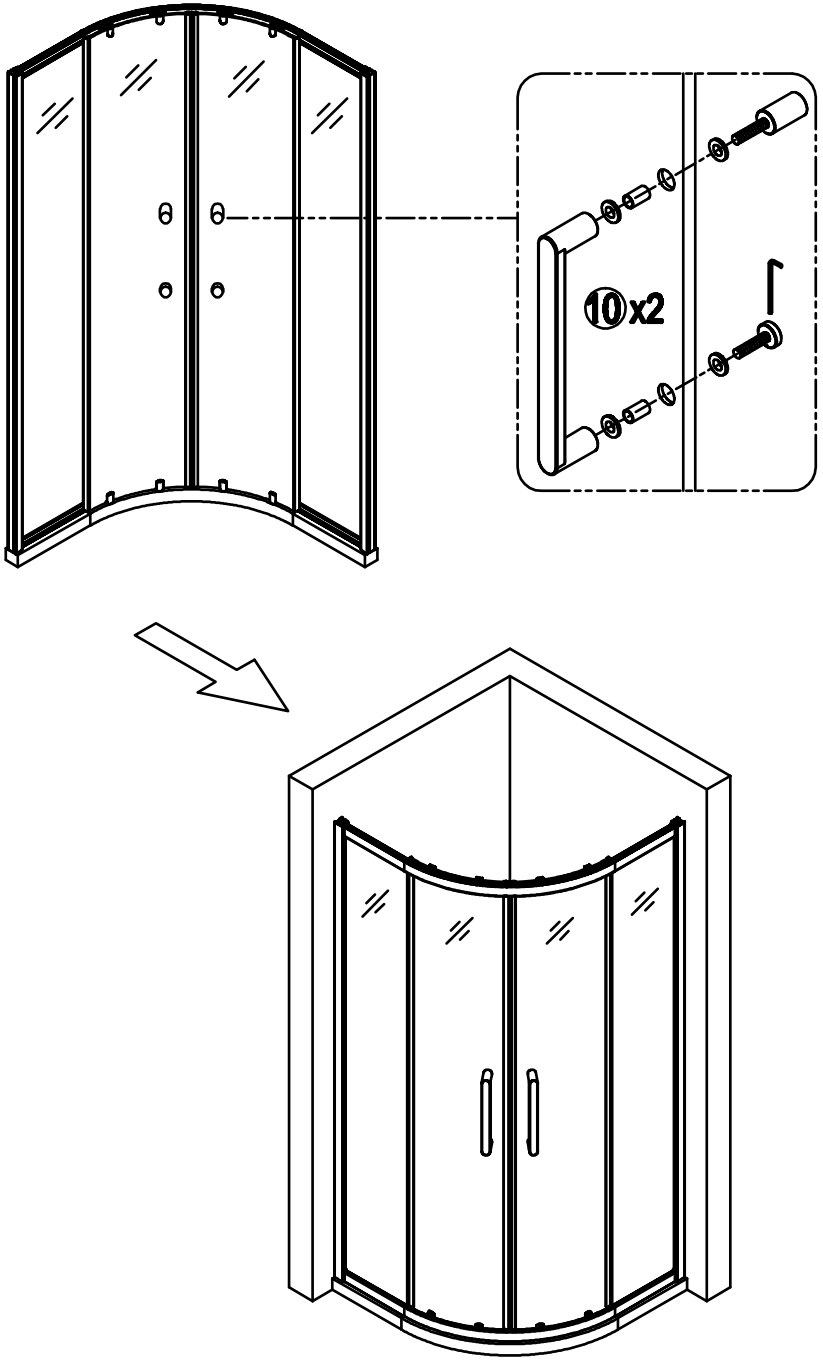

9

Care Instructions:
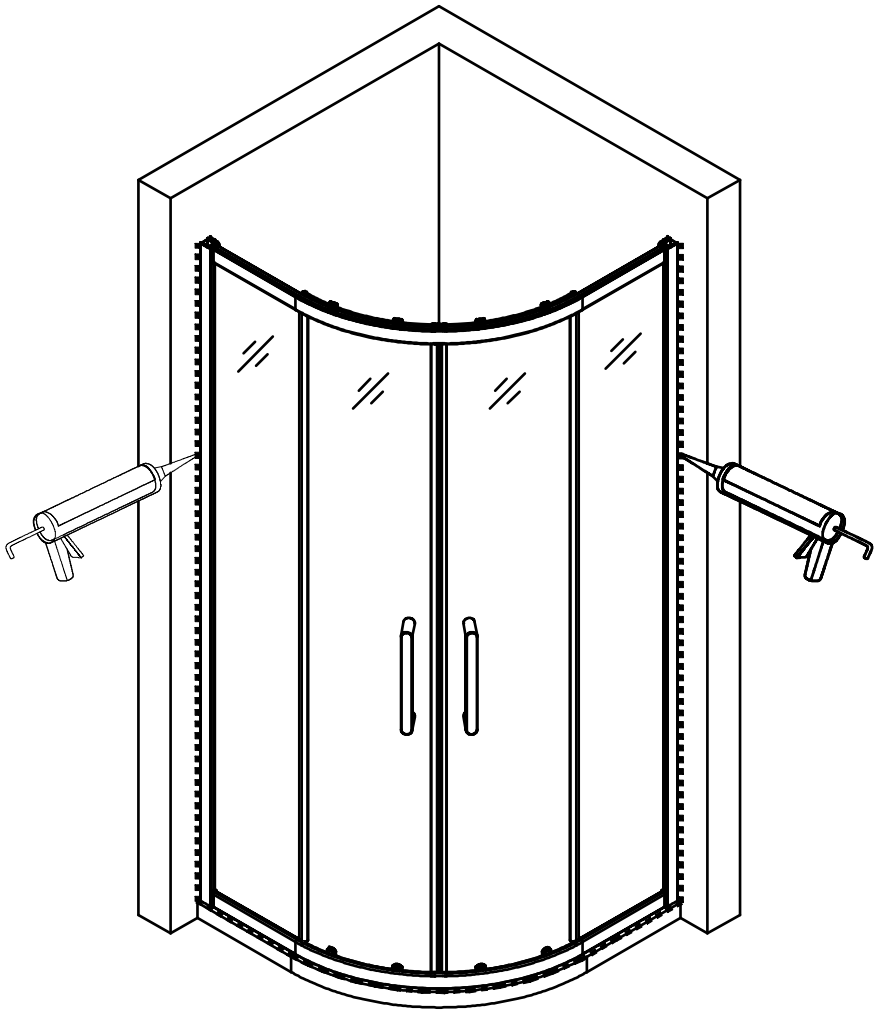
Do not use your shower enclosure within 24 hours of assembly .
Do not use caustic cleaning products or abrasive material when cleaning your shower enclosure.