Installation instructions

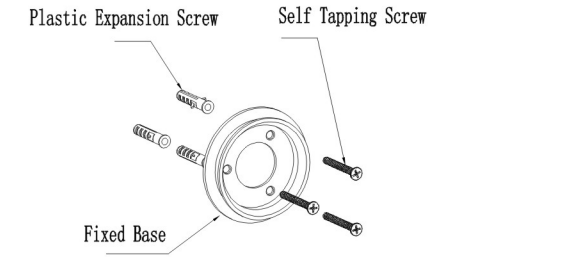

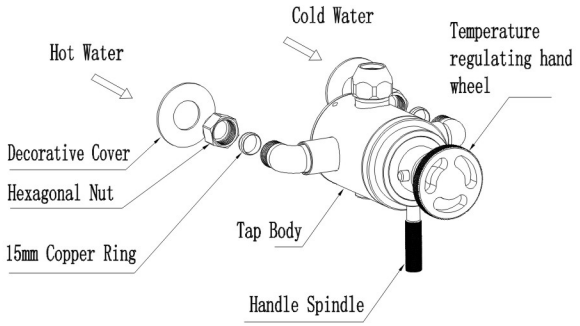

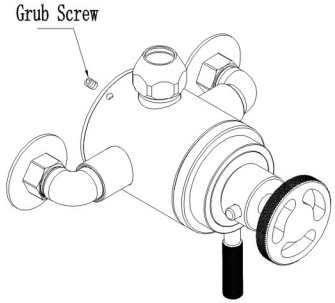

Exposed Tap

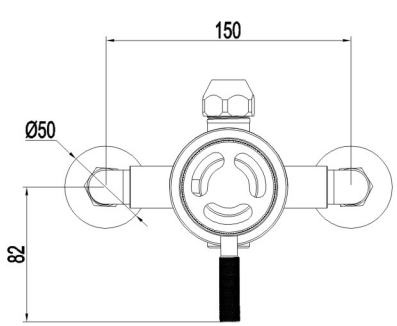

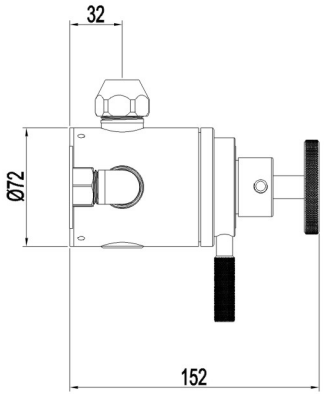

Concealed Tap with Panel

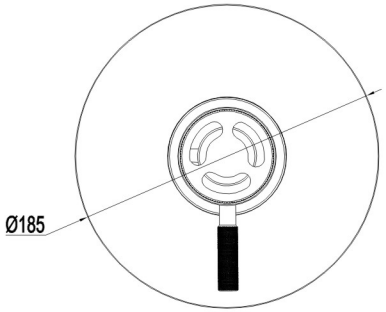

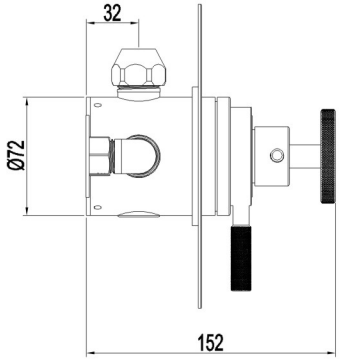

Technical Parameters

1. The operating pressure is 0.05Mpa ~ 0.5MPa, and the recommended pressure is 0.1Mpa ~ 0. 5MPa
2. Cold water supply temperature: 5℃~29℃, hot water supply temperature 55℃~ 85℃
3. Set the maximum outlet water temperature of 38℃

Install Caution

1. The thermostatic cartridge is tested and debugged by the factory, please do not disassemble it by yourself
2. Before installing the tap, the impurities and mud in the pipe must be removed to avoid blocking the tap and affecting the water outlet function
3. Pay attention to the inlet direction of hot and cold water when installing the tap
4. After installation, please check whether the connection is tight and whether the pipeline leaks.

Installation steps

1. Fix the base on the position of the wall with self tapping screw, connect the water inlet pipe with cold and hot position with the tap, and lock the hexagonal nut with a wrench
2. Tight screw, and fix the tap on the base
3. Unscrew handle pole, push panel into valve, then screw handle pole back. (Suitable for concealed tap with panel)

Victorian Plumbing

Diamond House. 41, Stephenson Way. Formby Business Park Formby. England. L37 8EG

Tel: 0044 800 862 0878

Website:www.victorianplumbing.co.uk