# INSTALLATION MANUAL

| | |
|---|---|
| RSF003-850F | |
| RSF003-880F | |
| RSF003-1136F | |

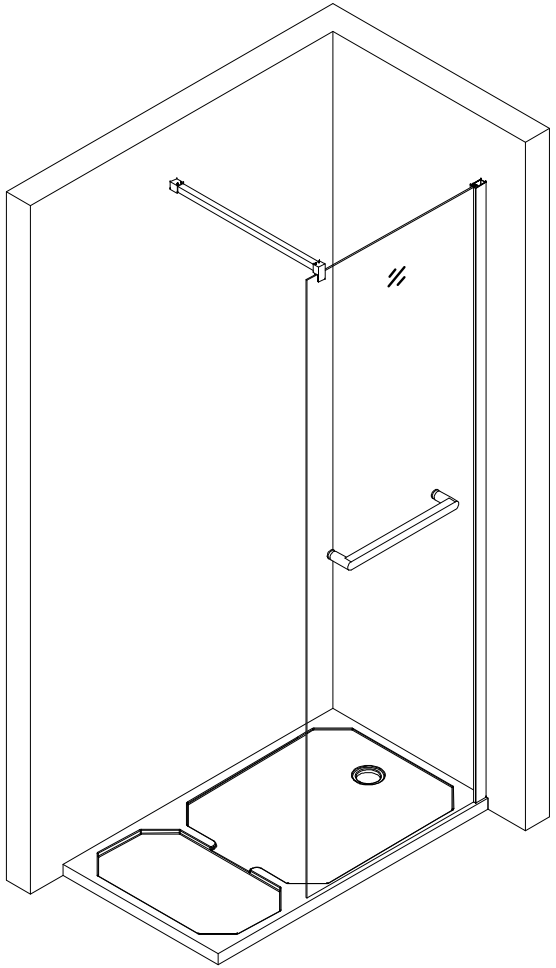

| | | |
|---|---|---|
| RSF003-850F | + RSF003-240R | |
| RSF003-880F | | |
| RSF003-1136F | | |

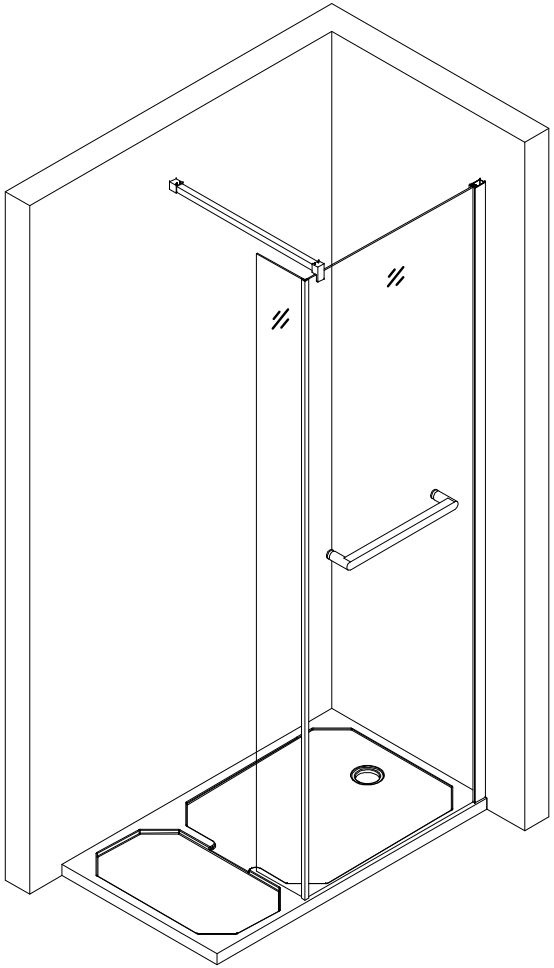

| | | |
|---|---|---|
| RSF003-850F | + RSF003-240R | RSF003-760S |
| RSF003-880F | | RSF003-800S |
| RSF003-1136F | | RSF003-900S |

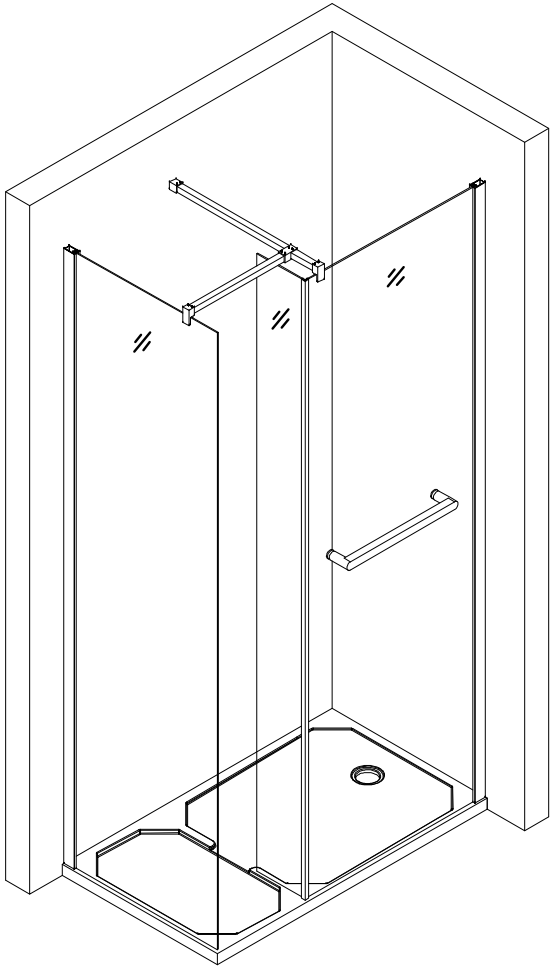

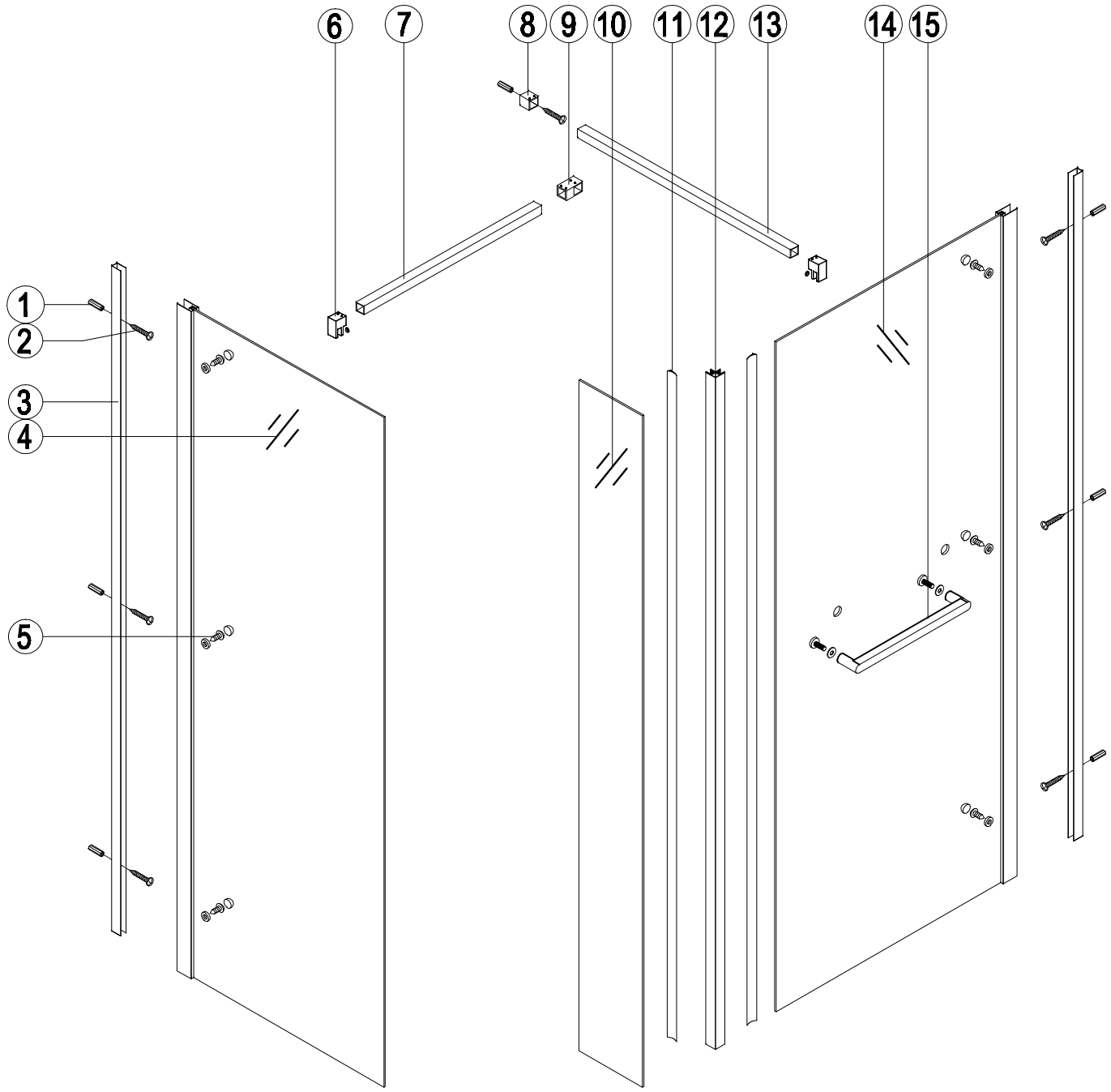
1
2
3
4
5
6
7
8
9
10
11
12
13
14
15

| | | | | | | | | | |
|---|---|---|---|---|---|---|---|---|---|
| RSF003-850F<br>RSF003-880F<br>RSF003-1136F | 1<br>Ø6x30<br>D6x30 4Pcs | 2<br>ST4x30<br>ST4x30 4Pcs | 3<br>RSF-W01 1Pc | 5<br>ST4x12<br>ST4x12 3Pcs | 6<br>RSF-X02 1Pc | 8<br>RSF-X01 1Pc | 13<br>880<br>RSF-W04 1Pc | 14<br>1Pc | 15<br>RSF-X04 1Pc |
| RSF003-240R | 10<br>1Pc | 11<br>RSF-Z01 2Pcs | 12<br>RSF-W02 1Pc | | | | | | |
| RSF003-760S<br>RSF003-800S<br>RSF003-900S | 1<br>Ø6x30<br>D6x30 3Pcs | 2<br>ST4x30<br>ST4x30 3Pcs | 3<br>RSF-W01 1Pc | 4<br>1Pc | 5<br>ST4x12<br>ST4x12 3Pcs | 6<br>RSF-X02 1Pc | 7<br>600<br>RSF-W03 1Pc | 9<br>RSF-X03 1Pc | Tools: |

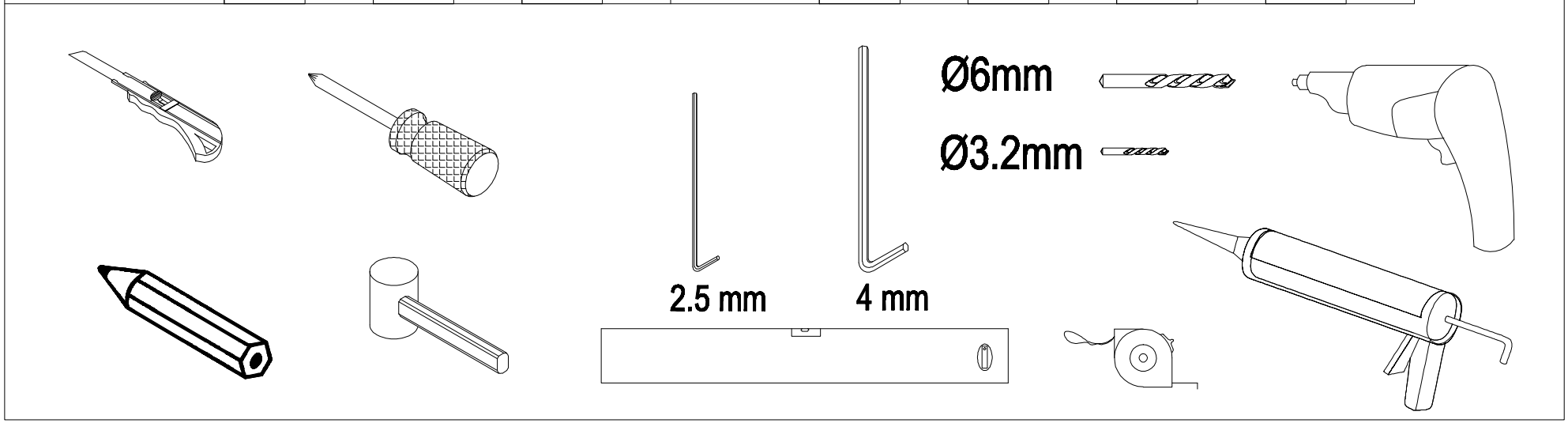

1

| W | L | X | Y |
|---|---|---|---|
| 760 | 1680 | 713-733 | 1110-1130 |
| 810 | 1410 | 763-783 | 830-850 |
| 910 | 1450 | 863-883 | 855-875 |

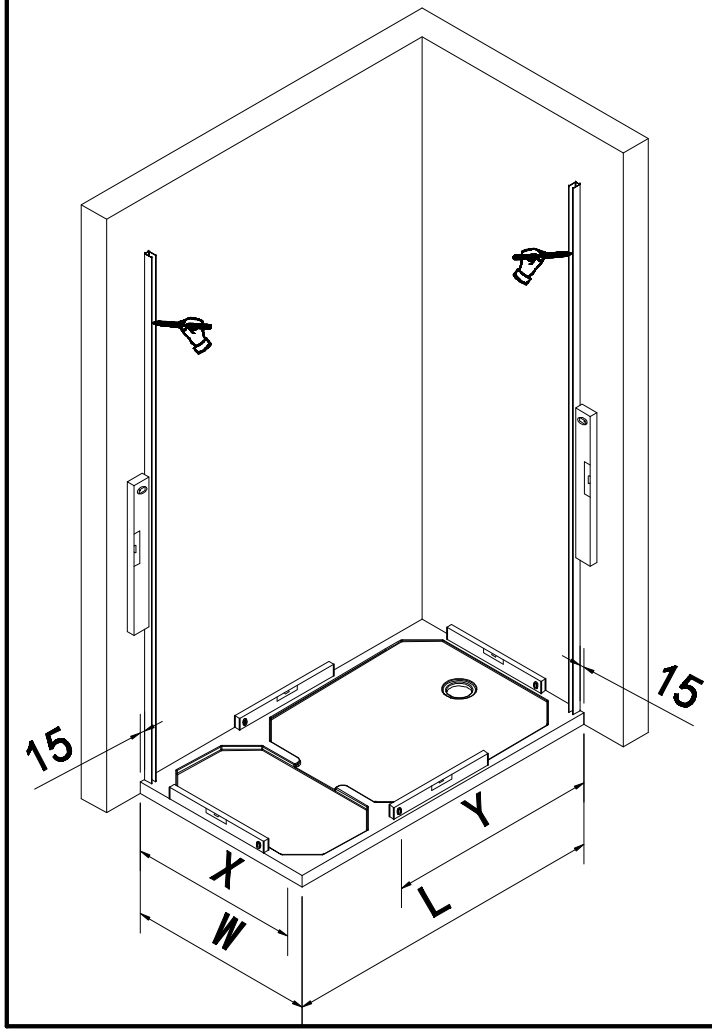


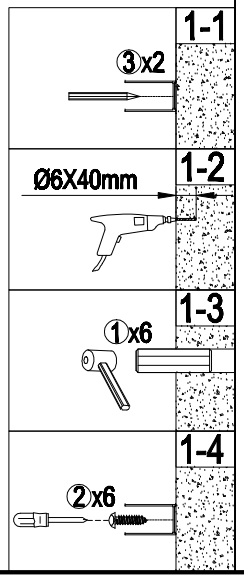


2

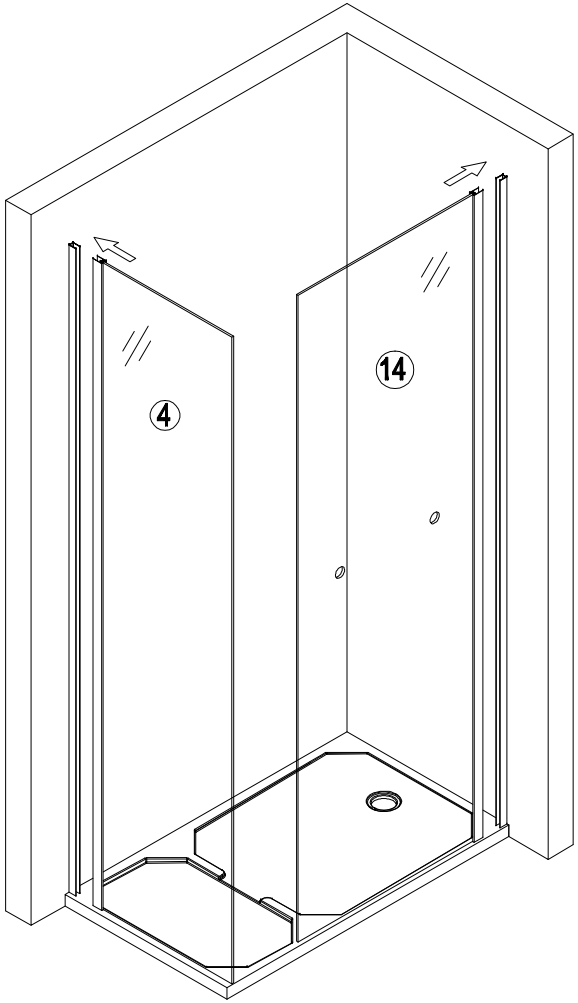


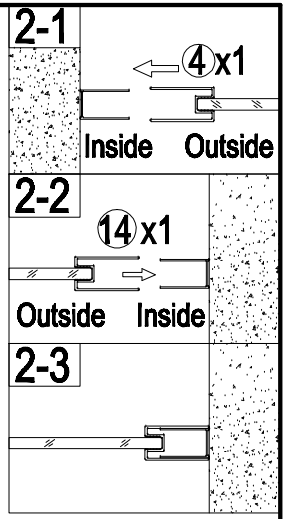

## 3

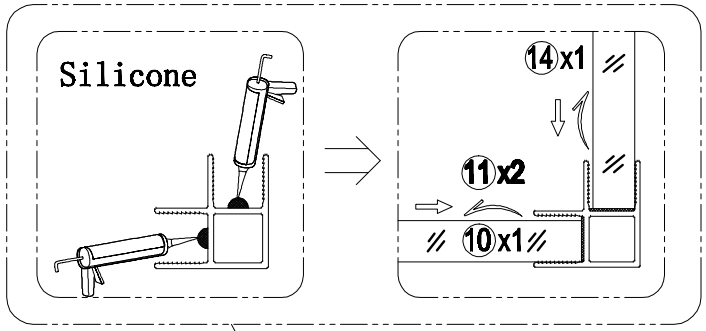


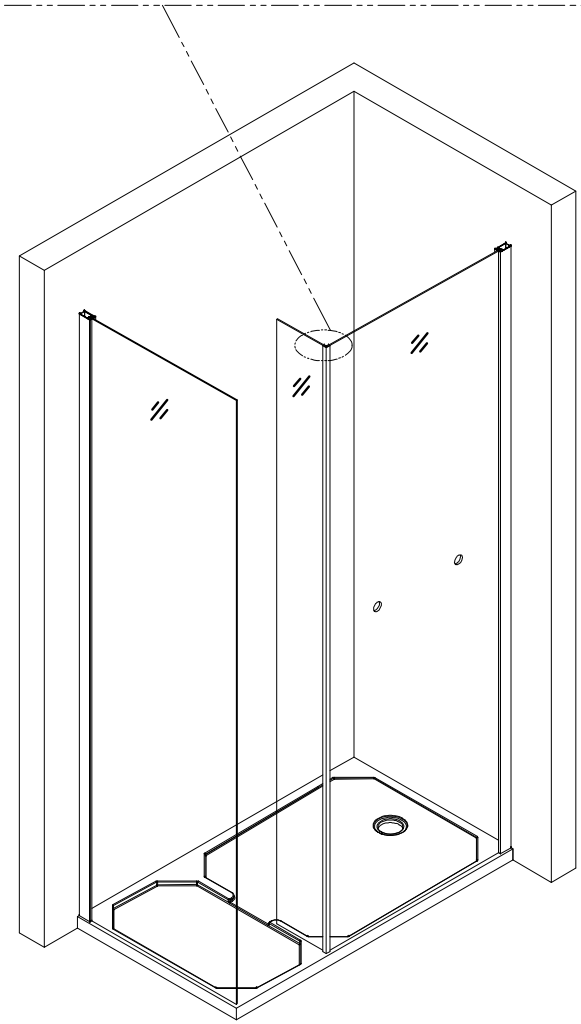

## 4

Remark: Cutting the supporting bar(part 13) to suitable length according to tray size.

| W | ⑬ |
|---|---|
| 760 | 730 |
| 810 | 780 |
| 910 | 880 |

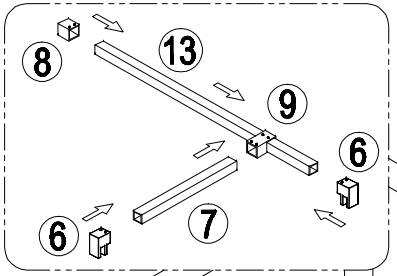


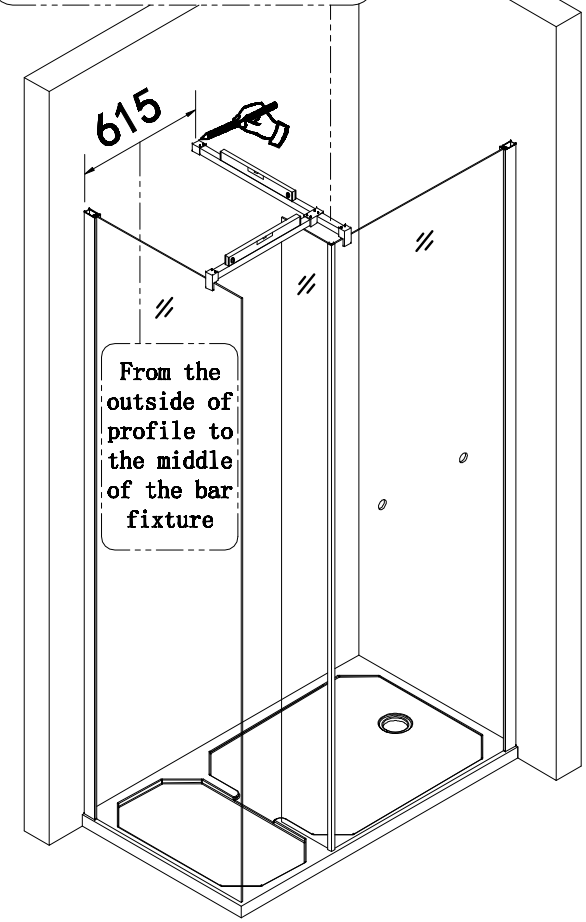


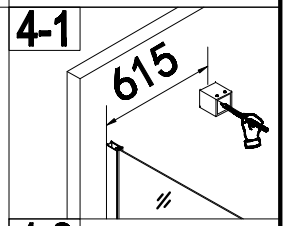


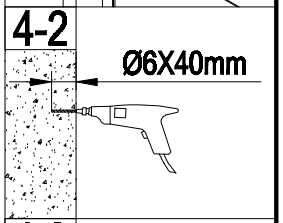


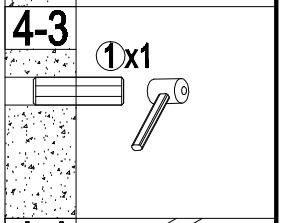


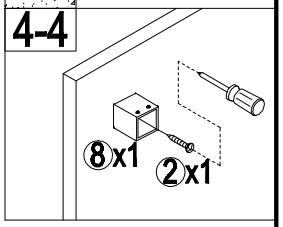

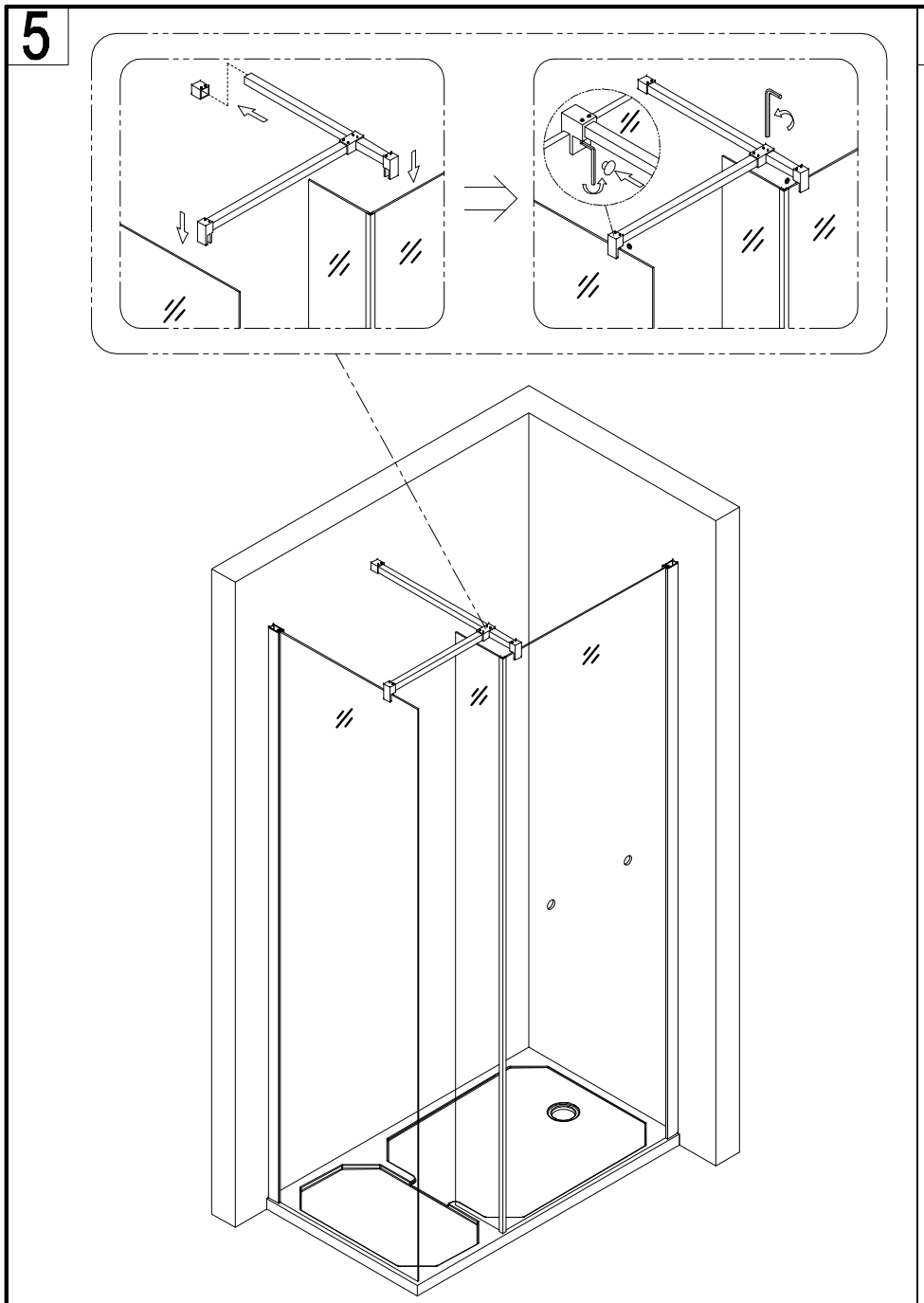
5

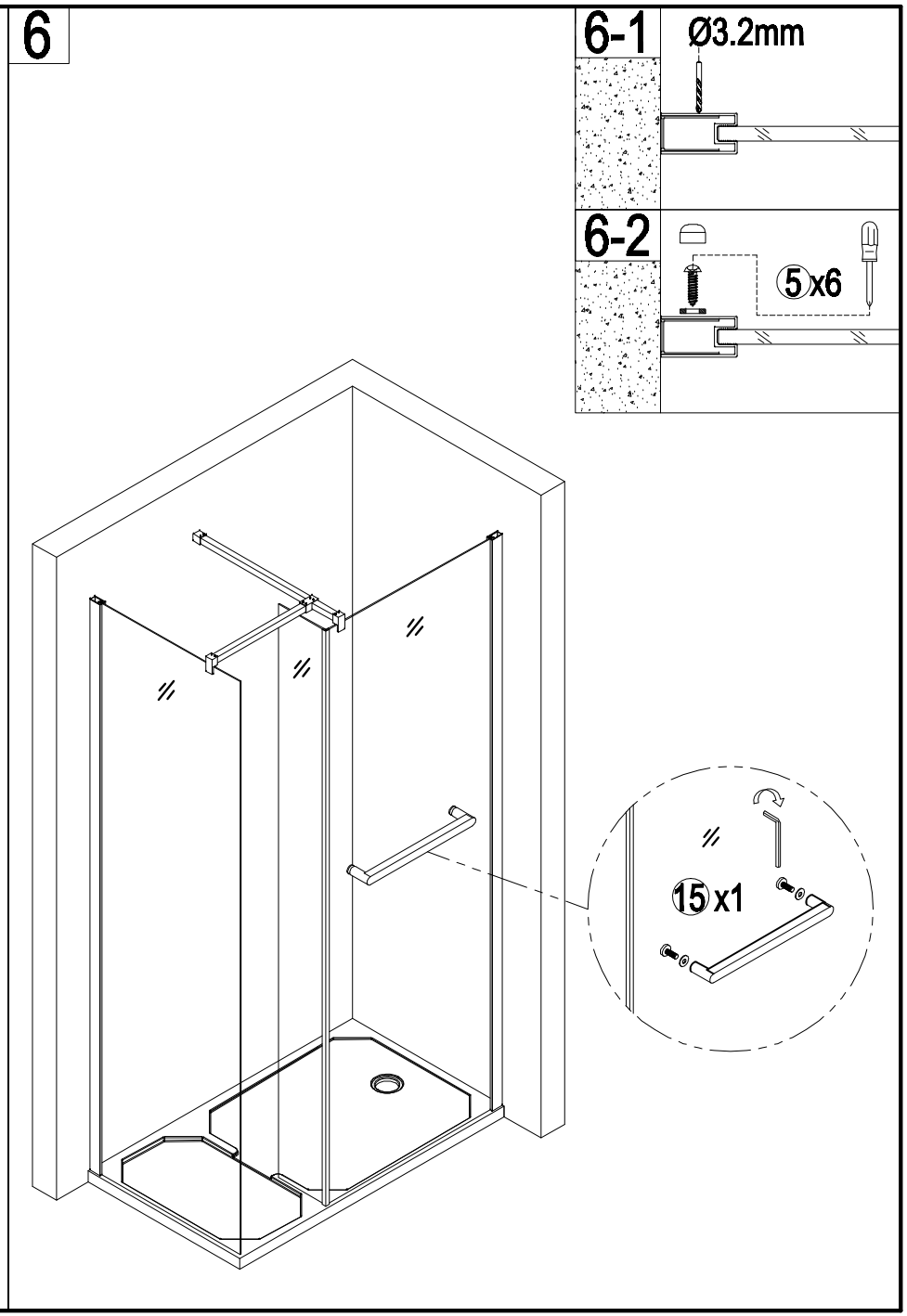
6
6-1
Ø3.2mm
6-2
5x6
15x1

Care Instructions:
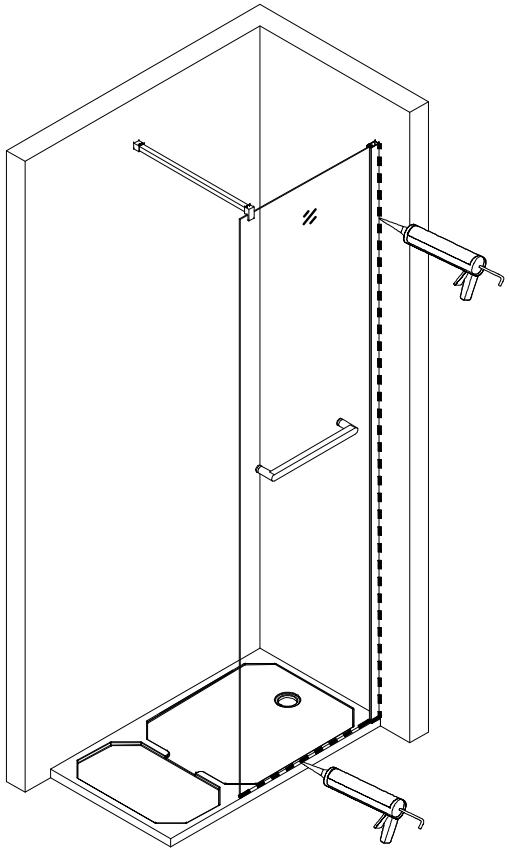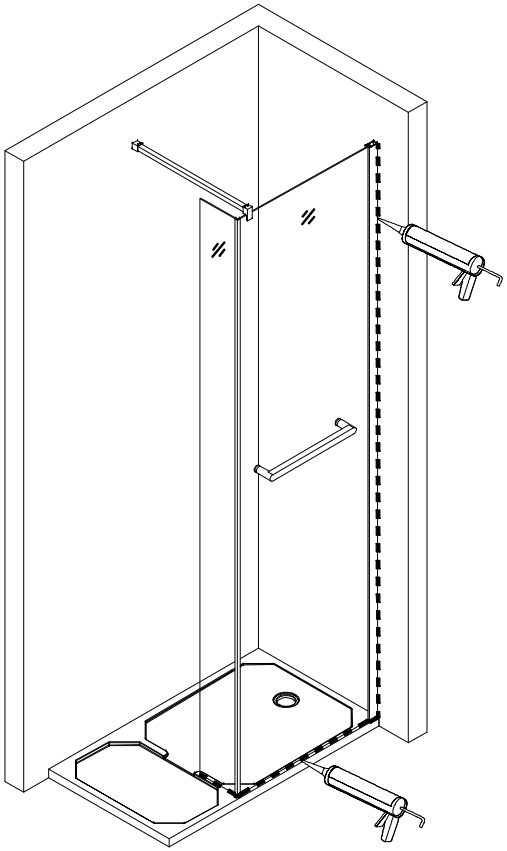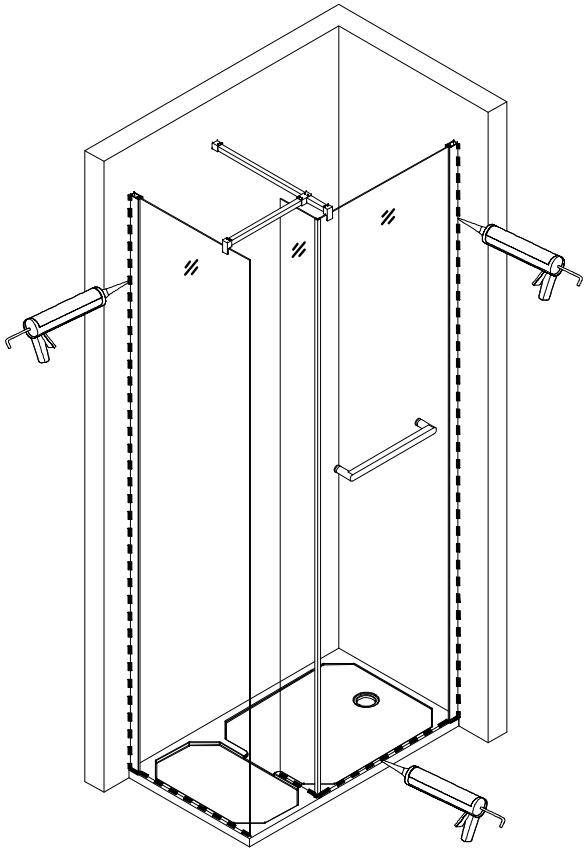
Do not use your shower enclosure within 24 hours of assembly . Do not use caustic cleaning products or abrasive material whencleaning your shower enclosure.